# Valvole di sicurezza scarico convogliato

*Safety valves piped outlet*

## Calcolo portata di scarico valvola di sicurezza (ISO 4126-7 Ed.2013)

*Safety Valve Fluid Delivery Calculation (ISO 4126-7 Ed.2013)*

| Tipo *Typ* | D7/C | | | | | D10/C | | | | | G10 | | | | | G14 | | | | | G15 | | | | |
|---|---|---|---|---|---|---|---|---|---|---|---|---|---|---|---|---|---|---|---|---|---|---|---|---|---|
| Fluido *Fluid* | Aria *Air* | Azoto *N2* | CO2 *CO2* | Vapore saturo Satured steam | Acqua *H2O* | Aria *Air* | Azoto *N2* | CO2 *CO2* | Vapore saturo Satured steam | Acqua *H2O* | Aria *Air* | Azoto *N2* | CO2 *CO2* | Vapore saturo Satured steam | Acqua *H2O* | Aria *Air* | Azoto *N2* | CO2 *CO2* | Vapore saturo Satured steam | Acqua *H2O* | Aria *Air* | Azoto *N2* | CO2 *CO2* | Vapore saturo Satured steam | Acqua *H2O* |
| PS (bar) | kg/h | kg/h | kg/h | kg/h | kg/h | kg/h | kg/h | kg/h | kg/h | kg/h | kg/h | kg/h | kg/h | kg/h | kg/h | kg/h | kg/h | kg/h | kg/h | kg/h | kg/h | kg/h | kg/h | kg/h | kg/h |
| 1,0 | 60 | 59 | 73 | 37 | 703 | 114 | 112 | 137 | 71 | 1434 | 123 | 121 | 148 | 76 | 1434 | 214 | 210 | 257 | 132 | 2612 | 225 | 221 | 270 | 139 | 3228 |
| 2,0 | 92 | 91 | 111 | 56 | 995 | 182 | 179 | 219 | 111 | 2028 | 188 | 185 | 225 | 114 | 2028 | 338 | 332 | 406 | 206 | 3694 | 343 | 337 | 412 | 209 | 4564 |
| 3,0 | 124 | 122 | 149 | 75 | 1218 | 255 | 251 | 307 | 154 | 2483 | 252 | 248 | 303 | 152 | 2483 | 465 | 457 | 558 | 281 | 4524 | 461 | 453 | 554 | 278 | 5590 |
| 4,0 | 155 | 153 | 187 | 93 | 1406 | 321 | 315 | 385 | 192 | 2868 | 317 | 312 | 380 | 190 | 2868 | 584 | 574 | 701 | 350 | 5224 | 579 | 569 | 695 | 347 | 6455 |
| 5,0 | 187 | 184 | 225 | 112 | 1572 | 386 | 380 | 463 | 230 | 3206 | 381 | 375 | 458 | 228 | 3206 | 703 | 691 | 844 | 419 | 5841 | 697 | 685 | 837 | 416 | 7217 |
| 6,0 | 219 | 215 | 263 | 130 | 1723 | 451 | 444 | 542 | 268 | 3512 | 446 | 439 | 535 | 265 | 3512 | 822 | 808 | 987 | 489 | 6398 | 815 | 801 | 978 | 484 | 7906 |
| 7,0 | 250 | 246 | 301 | 148 | 1861 | 517 | 508 | 620 | 306 | 3794 | 511 | 502 | 613 | 302 | 3794 | 941 | 925 | 1130 | 557 | 6911 | 933 | 917 | 1120 | 552 | 8539 |
| 8,0 | 282 | 277 | 339 | 167 | 1989 | 582 | 572 | 699 | 344 | 4056 | 575 | 566 | 691 | 340 | 4056 | 1060 | 1042 | 1273 | 626 | 7388 | 1051 | 1033 | 1262 | 621 | 9129 |
| 9,0 | 314 | 308 | 377 | 185 | 2110 | 647 | 636 | 777 | 381 | 4302 | 640 | 629 | 768 | 377 | 4302 | 1179 | 1159 | 1416 | 694 | 7836 | 1169 | 1149 | 1403 | 688 | 9683 |
| 10,0 | 345 | 340 | 415 | 203 | 2224 | 713 | 701 | 855 | 419 | 4534 | 704 | 692 | 846 | 414 | 4534 | 1298 | 1276 | 1558 | 763 | 8260 | 1287 | 1265 | 1545 | 757 | 10206 |
| 15,0 | 504 | 495 | 605 | 294 | 2724 | 1039 | 1022 | 1248 | 607 | 5553 | 1027 | 1010 | 1233 | 600 | 5553 | 1893 | 1861 | 2273 | 1106 | 10116 | 1877 | 1845 | 2253 | 1096 | 12500 |
| 20,0 | 662 | 651 | 795 | 386 | 3145 | 1366 | 1343 | 1640 | 795 | 6412 | 1350 | 1327 | 1621 | 786 | 6412 | 2488 | 2446 | 2987 | 1449 | 11681 | | | | | |
| 25,0 | 820 | 807 | 985 | 477 | 3516 | 1692 | 1664 | 2032 | 985 | 7169 | 1673 | 1645 | 2008 | 973 | 7169 | 3083 | 3031 | 3701 | 1794 | 13060 | | | | | |
| 30,0 | 979 | 962 | 1175 | | 3852 | 2019 | 1985 | 2424 | | 7853 | 1995 | 1962 | 2396 | | 7853 | 3678 | 3616 | 4415 | | 14306 | | | | | |
| 35,0 | 1137 | 1118 | 1365 | | 4160 | 2345 | 2306 | 2816 | | 8483 | | | | | | 4273 | 4201 | 5130 | | 15453 | | | | | |
| 40,0 | 1295 | 1274 | 1555 | | 4448 | 2672 | 2627 | 3208 | | 9068 | | | | | | 4867 | 4786 | 5844 | | 16519 | | | | | |
| 45,0 | 1454 | 1429 | 1745 | | 4717 | 2999 | 2948 | 3600 | | 9618 | | | | | | 5462 | 5371 | 6558 | | 17522 | | | | | |
| 50,0 | 1612 | 1585 | 1935 | | 4973 | 3325 | 3270 | 3992 | | 10139 | | | | | | 6057 | 5956 | 7272 | | 18469 | | | | | |
| 55,0 | 1770 | 1741 | 2125 | | 5215 | 3652 | 3591 | 4384 | | 10634 | | | | | | 6652 | 6541 | 7987 | | 19371 | | | | | |
| 60,0 | 1928 | 1896 | 2315 | | 5447 | 3978 | 3912 | 4776 | | 11106 | | | | | | 7247 | 7126 | 8701 | | 20232 | | | | | |

A richiesta siamo in grado eseguire calcoli specifici per altri gas, temperature e pressioni

*On request we can perform specific calculations for other gases, temperatures and pressures*

| Tipo *Typ* | G20 | | | | | G25 | | | | | G32 | | | | | B38/L | | | | | G40 | | | | |
|---|---|---|---|---|---|---|---|---|---|---|---|---|---|---|---|---|---|---|---|---|---|---|---|---|---|
| Fluido *Fluid* | Aria *Air* | Azoto *N2* | CO2 *CO2* | Vapore saturo Satured steam | Acqua *H2O* | Aria *Air* | Azoto *N2* | CO2 *CO2* | Vapore saturo Satured steam | Acqua *H2O* | Aria *Air* | Azoto *N2* | CO2 *CO2* | Vapore saturo Satured steam | Acqua *H2O* | Aria *Air* | Azoto *N2* | CO2 *CO2* | Vapore saturo Satured steam | Acqua *H2O* | Aria *Air* | Azoto *N2* | CO2 *CO2* | Vapore saturo Satured steam | Acqua *H2O* |
| PS (bar) | kg/h | kg/h | kg/h | kg/h | kg/h | kg/h | kg/h | kg/h | kg/h | kg/h | kg/h | kg/h | kg/h | kg/h | kg/h | kg/h | kg/h | kg/h | kg/h | kg/h | kg/h | kg/h | kg/h | kg/h | kg/h |
| 1,0 | 481 | 473 | 578 | 297 | 5735 | 707 | 695 | 849 | 436 | 8961 | 787 | 774 | 945 | 486 | 14682 | 1591 | 1565 | 1910 | 982 | 20705 | 1462 | 1438 | 1756 | 903 | 22952 |
| 2,0 | 734 | 721 | 881 | 447 | 8111 | 1077 | 1059 | 1293 | 656 | 12673 | 1199 | 1179 | 1440 | 730 | 20763 | 2425 | 2384 | 2911 | 1477 | 29281 | 2370 | 2330 | 2845 | 1444 | 32460 |
| 3,0 | 986 | 969 | 1183 | 595 | 9934 | 1447 | 1423 | 1738 | 874 | 15521 | 1611 | 1584 | 1934 | 973 | 25430 | 3258 | 3204 | 3912 | 1967 | 35861 | 3374 | 3318 | 4051 | 2037 | 39755 |
| 4,0 | 1238 | 1217 | 1486 | 742 | 11471 | 1817 | 1787 | 2182 | 1090 | 17922 | 2023 | 1990 | 2429 | 1213 | 29364 | 4092 | 4023 | 4912 | 2454 | 41409 | 4237 | 4167 | 5087 | 2541 | 45905 |
| 5,0 | 1490 | 1465 | 1789 | 889 | 12825 | 2188 | 2151 | 2627 | 1305 | 20037 | 2436 | 2395 | 2924 | 1453 | 32829 | 4925 | 4843 | 5913 | 2938 | 46297 | 5101 | 5015 | 6124 | 3043 | 51323 |
| 6,0 | 1742 | 1713 | 2092 | 1035 | 14049 | 2558 | 2515 | 3071 | 1520 | 21950 | 2848 | 2800 | 3419 | 1692 | 35963 | 5759 | 5662 | 6914 | 3422 | 50716 | 5964 | 5864 | 7160 | 3544 | 56222 |
| 7,0 | 1994 | 1961 | 2394 | 1181 | 15174 | 2928 | 2879 | 3516 | 1734 | 23709 | 3260 | 3205 | 3914 | 1930 | 38844 | 6592 | 6482 | 7914 | 3903 | 54779 | 6827 | 6713 | 8196 | 4043 | 60726 |
| 8,0 | 2246 | 2209 | 2697 | 1326 | 16222 | 3298 | 3243 | 3960 | 1948 | 25346 | 3672 | 3611 | 4409 | 2168 | 41526 | 7426 | 7302 | 8915 | 4385 | 58562 | 7690 | 7562 | 9233 | 4541 | 64919 |
| 9,0 | 2499 | 2457 | 3000 | 1472 | 17206 | 3669 | 3607 | 4405 | 2161 | 26883 | 4084 | 4016 | 4903 | 2406 | 44045 | 8259 | 8121 | 9916 | 4865 | 62114 | 8553 | 8410 | 10269 | 5038 | 68857 |
| 10,0 | 2751 | 2705 | 3302 | 1617 | 18137 | 4039 | 3971 | 4849 | 2374 | 28337 | 4496 | 4421 | 5398 | 2643 | 46428 | 9093 | 8941 | 10916 | 5346 | 65474 | 9417 | 9259 | 11305 | 5536 | 72582 |
| 15,0 | 4011 | 3944 | 4816 | 2343 | 22213 | 5890 | 5792 | 7071 | 3440 | 34706 | | | | | | 13260 | 13038 | 15920 | 7744 | 80189 | | | | | |
| 20,0 | 5272 | 5184 | 6330 | 3070 | 25649 | 7741 | 7612 | 9294 | 4508 | 40075 | | | | | | 17427 | 17136 | 20923 | 10150 | 92594 | | | | | |
| 25,0 | 6533 | 6424 | 7843 | 3802 | 28677 | 9592 | 9432 | 11516 | 5582 | 44805 | | | | | | 21595 | 21234 | 25927 | 12566 | 103523 | | | | | |
| 30,0 | 7794 | 7663 | 9357 | | 31414 | 11443 | 11252 | 13739 | | 49082 | | | | | | 25762 | 25332 | 30930 | | 113404 | | | | | |
| 35,0 | 9054 | 8903 | 10871 | | 33931 | 13295 | 13072 | 15961 | | 53014 | | | | | | | | | | | | | | | |
| 40,0 | 10315 | 10143 | 12384 | | 36274 | 15146 | 14893 | 18184 | | 56675 | | | | | | | | | | | | | | | |
| 45,0 | 11576 | 11383 | 13898 | | 38474 | 16997 | 16713 | 20406 | | 60112 | | | | | | | | | | | | | | | |
| 50,0 | 12837 | 12622 | 15412 | | 40555 | 18848 | 18533 | 22629 | | 63364 | | | | | | | | | | | | | | | |
| 55,0 | 14097 | 13862 | 16925 | | 42535 | 20699 | 20353 | 24851 | | 66457 | | | | | | | | | | | | | | | |
| 60,0 | 15358 | 15102 | 18439 | | 44426 | 22550 | 22174 | 27074 | | 69412 | | | | | | | | | | | | | | | |

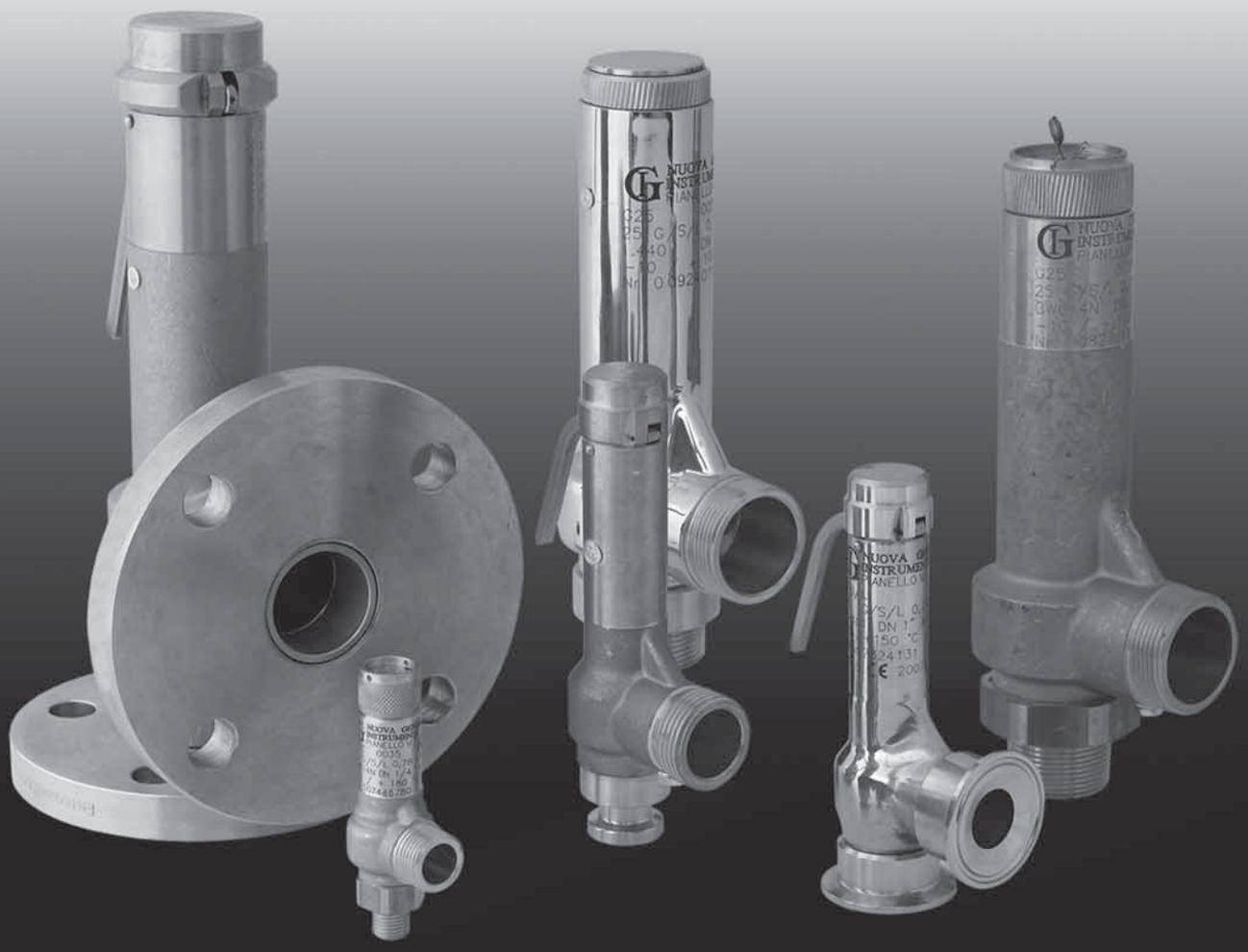

# SAFETY VALVES

*Safety valves homologated*

***CE 2014/68/EU ATEX ASME VIII Div. I UV***

***Canadian Reg. CRN EAC***

# SCARICO CONVOGLIATO / *PIPED OUTLET*

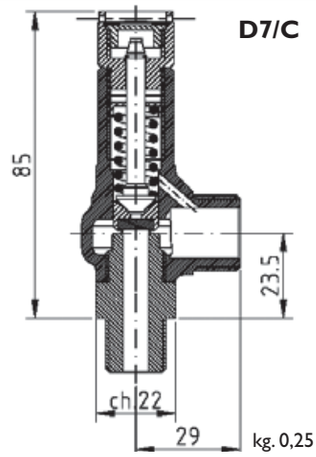


kg. 0,25

| Tipo: / *Type:* | D7/C | do: 7 mm | |
|---|---|---|---|
| **Omologazione** *Homologation* | **PN** | **Coefficiente efflusso ridotto** *Low flow coefficient* | **Campo di taratura** *Setting range* |
| E.D. 2014/68/UE IV^ Cat.(PED) | 60 | 0,85 | 0,3 - 60,0 bar |
| EAC | 60 | 0,85 | 0,3 - 60,0 bar |
| ATEX Ex h II 2 G | 60 | 0,85 | 0,3 - 60,0 bar |
| ATEX Ex h II 2 D (1) | 60 | 0,85 | 0,3 - 60,0 bar |
| ASME VIII Div.1 | 60 | 0,629 | 1,0 - 60,0 bar |
| Canadian Reg. CRN | 60 | 0,629 | 1,0 - 60,0 bar |

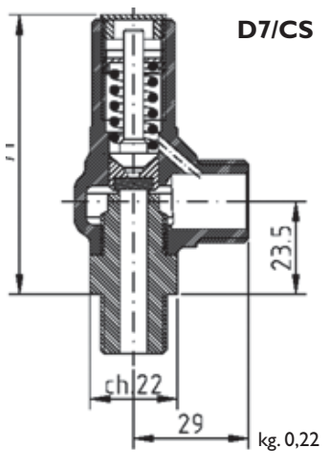


kg. 0,22

## CONFIGURAZIONE - *CONFIGURATION*

| Materiale / *Material* | Ottone / *Brass* | Mista Ottone - Acciaio inox *Mixed Brass - Stailnes steel* | Acciaio inox *Stailnes steel* |
|---|---|---|---|
| **Modelli / *Model*** | Con ghiera *With ring nut* | Con ghiera *With ring nut* | Con ghiera *With ring nut* |
| | Senza ghiera *Without ring nut* | Senza ghiera *Without ring nut* | Senza ghiera *Without ring nut* |
| | / / | / / | / / |
| | / / | / / | / / |
| | / / | / / | / / |
| **Sedi di Tenuta** *Seal System* | N.B.R. (Std) - 10 / + 100 °C<br>E.P.D.M. - 50 / + 150 °C<br>VITON - 20 / +200 °C<br>SILICONE - 60 / +200 °C<br>PTFE - 196 / +250 °C<br>KALREZ - 20 / +250 °C | N.B.R. (Std) - 10 / + 100 °C<br>E.P.D.M. - 50 / + 150 °C<br>VITON - 20 / +200 °C<br>SILICONE - 60 / +200 °C<br>PTFE - 196 / +250 °C<br>KALREZ - 20 / +250 °C | N.B.R. (Std) - 10 / + 100 °C<br>E.P.D.M. - 50 / + 150 °C<br>VITON - 20 / +200 °C<br>SILICONE - 60 / +200 °C<br>PTFE - 196 / +250 °C<br>KALREZ - 20 / +275°C |
| **Connessione Entrata** *Inlet Connection* | G.1/4" - 3/8" ISO228<br>G.3/8" ISO228 F<br>R.1/4" - 3/8" EN10226<br>1/4" - 3/8" NPT<br>/<br>/<br>/<br>/ | G.1/4" - 3/8" ISO228<br>G.3/8" ISO228 F<br>R.1/4" - 3/8" EN10226<br>1/4" - 3/8" NPT<br>3/4" Tri Clamp<br>/<br>/<br>/ | G.1/4" - 3/8" ISO228<br>G.3/8" ISO228 F<br>R.1/4" - 3/8" EN10226<br>1/4" - 3/8" NPT<br>3/4" Tri Clamp<br>/<br>/<br>/ |
| **Connessione Uscita** *Outlet Connection* | G.1/2" ISO228<br>/<br>/<br>/<br>/<br>/<br>/ | G.1/2" ISO228<br>/<br>/<br>/<br>/<br>/<br>/ | G.1/2" ISO228<br>/<br>/<br>/<br>/<br>/<br>/ |

A richiesta possono essere eseguiti collaudi dai più prestigiosi enti quali: INAIL (area ISPESL), TÜV, RINA, Bureau Veritas, ABS e Lloyd Register.
*On request tests can be made by the most prestigious societies, such as: INAIL (area ISPELS), TÜV, RINA, Bureau Veritas, ABS and Lloyd Register.*

*Note: (1) No Modello Con leva / No Model With lever*

# SCARICO CONVOGLIATO / *PIPED OUTLET*

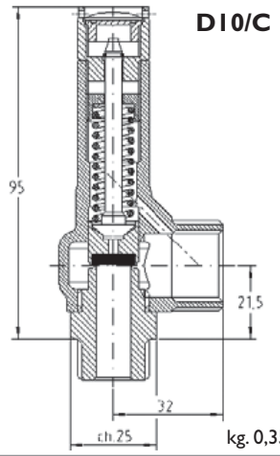


kg. 0,35

| Tipo: / *Type:* | D10/C | do: 10 mm | |
|---|---|---|---|
| **Omologazione** *Homologation* | **PN** | **Coefficiente efflusso ridotto** *Low flow coefficient* | **Campo di taratura** *Setting range* |
| E.D. 2014/68/UE IV^ Cat.(PED) | 60 | 0,77; >3 bar 0,86 | 0,3 - 60,0 bar |
| EAC | 60 | 0,77; >3 bar 0,86 | 0,3 - 60,0 bar |
| ATEX Ex h II 2 G | 60 | 0,77; >3 bar 0,86 | 0,3 - 60,0 bar |
| ATEX Ex h II 2 D (1) | 60 | 0,77; >3 bar 0,86 | 0,3 - 60,0 bar |
| ASME VIII Div.1 | 60 | 0,629 | 1,0 - 60,0 bar |
| Canadian Reg. CRN | 60 | 0,629 | 1,0 - 60,0 bar |

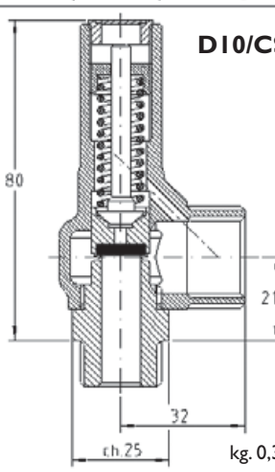


kg. 0,33

## CONFIGURAZIONE - *CONFIGURATION*

| Materiale / *Material* | Ottone / *Brass* | Mista Ottone - Acciaio inox *Mixed Brass - Stailnes steel* | Acciaio inox *Stailnes steel* |
|---|---|---|---|
| Modelli / *Model* | Con ghiera *With ring nut* | Con ghiera *With ring nut* | Con ghiera *With ring nut* |
| | Senza ghiera *Without ring nut* | Senza ghiera *Without ring nut* | Senza ghiera *Without ring nut* |
| | / / | / / | / / |
| | / / | / / | / / |
| | / / | / / | / / |
| Sedi di Tenuta *Seal System* | N.B.R. (Std) -10 / + 100 °C<br>E.P.D.M. - 50 / + 150 °C<br>VITON - 20 / +200 °C<br>SILICONE - 60 / +200 °C<br>PTFE - 196 / +250 °C<br>KALREZ - 20 / +250 °C<br>/ | N.B.R. (Std) -10 / + 100 °C<br>E.P.D.M. - 50 / + 150 °C<br>VITON - 20 / +200 °C<br>SILICONE - 60 / +200 °C<br>PTFE - 196 / +250 °C<br>KALREZ - 20 / +250 °C<br>Metal - 196 / +250 °C | N.B.R. (Std) - 10 / + 100 °C<br>E.P.D.M. - 50 / + 150 °C<br>VITON - 20 / +200 °C<br>SILICONE - 60 / +200 °C<br>PTFE - 196 / +250 °C<br>KALREZ - 20 / +275 °C<br>Metal - 196 / +450 °C |
| Connessione Entrata *Inlet Connection* | G.3/8" - 1/2" ISO228<br>G.1/2" ISO228 F<br>R.3/8" - 1/2" EN10226<br>3/8" - 1/2" NPT<br>DN15 PN16 - 40<br>1/2" 150 - 300 lb<br>/<br>/ | G.3/8" - 1/2" ISO228<br>G.1/2" ISO228 F<br>R.3/8" - 1/2" EN10226<br>3/8" - 1/2" NPT<br>3/4" Tri Clamp<br>DN15 PN16 - 40 - 60<br>1/2" 150 - 300 lb<br>/ | G.3/8" - 1/2" ISO228<br>G.1/2" ISO228 F<br>R.3/8" - 1/2" EN10226<br>3/8" - 1/2" NPT<br>3/4" Tri Clamp<br>DN15 PN16 - 40 - 60<br>1/2" 150 - 300 lb<br>/ |
| Connessione Uscita *Outlet Connection* | G.3/4" ISO228<br>DN20 PN16 - 40 - 60<br>/<br>/<br>/<br>/<br>/ | G.3/4" ISO228<br>1" - 1"1/2 Tri Clamp<br>DN20 PN16 - 40 - 60<br>/<br>/<br>/<br>/ | G.3/4" ISO228<br>1" - 1"1/2 Tri Clamp<br>DN20 PN16 - 40 - 60<br>/<br>/<br>/<br>/ |

A richiesta possono essere eseguiti collaudi dai più prestigiosi enti quali: INAIL (area ISPESL), TÜV, RINA, Bureau Veritas, ABS e Lloyd Register.
*On request tests can be made by the most prestigious societies, such as: INAIL (area ISPELS), TÜV, RINA, Bureau Veritas, ABS and Lloyd Register.*

*Note: (1) No Modello Con leva / No Model With lever*

# SCARICO CONVOGLIATO / *PIPED OUTLET*

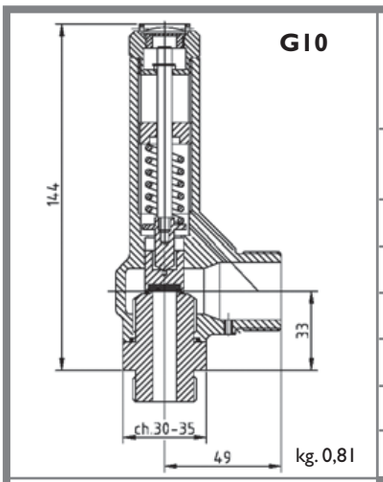


| Tipo: / *Type:* | G10 | do: 10 mm | |
|---|---|---|---|
| Omologazione *Homologation* | PN | Coefficiente efflusso ridotto *Low flow coefficient* | Campo di taratura *Setting range* |
| E.D. 2014/68/UE IV^ Cat.(PED) | 40 | 0,85 | 0,3 - 30,0 bar |
| EAC | 40 | 0,85 | 0,3 - 30,0 bar |
| ATEX Ex h II 2 G | 40 | 0,85 | 0,3 - 30,0 bar |
| ATEX Ex h II 2 D (1) | 40 | 0,85 | 0,3 - 30,0 bar |
| ASME VIII Div.1 | 40 | 0,629 | 1,0 - 40,0 bar |
| Canadian Reg. CRN | 40 | 0,629 | 1,0 - 40,0 bar |

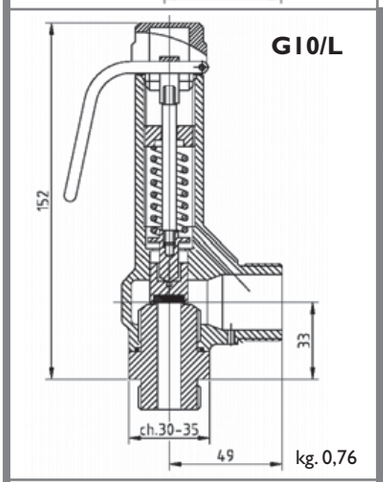


## CONFIGURAZIONE - *CONFIGURATION*

| Materiale / *Material* | Ottone / *Brass* | Mista Ottone - Acciaio inox *Mixed Brass - Stailnes steel* | Acciaio inox *Stailnes steel* |
|---|---|---|---|
| Modelli / *Model* | Con ghiera *With ring nut* | Con ghiera *With ring nut* | Con ghiera *With ring nut* |
| | Senza ghiera *Without ring nut* | Senza ghiera *Without ring nut* | Senza ghiera *Without ring nut* |
| | Con leva With lever | Con leva With lever | Con leva With lever |
| | / / | / / | Con apertura pneumatica With pneumatic opening |
| | / / | / / | Pneumatica con sensore Pneumatic with sensor |
| Sedi di Tenuta *Seal System* | N.B.R. (Std) - 10 / + 100 °C<br>E.P.D.M. - 50 / + 150 °C<br>VITON - 20 / +200 °C<br>SILICONE - 60 / +200 °C<br>PTFE - 196 / +250 °C<br>KALREZ - 20 / +250 °C<br>/ | N.B.R. (Std) - 10 / + 100 °C<br>E.P.D.M. - 50 / + 150 °C<br>VITON - 20 / +200 °C<br>SILICONE - 60 / +200 °C<br>PTFE - 196 / +250 °C<br>KALREZ - 20 / +250 °C<br>METAL - 196 / +250 °C | N.B.R. (Std) - 10 / + 100 °C<br>E.P.D.M. - 50 / + 150 °C<br>VITON - 20 / +200 °C<br>SILICONE - 60 / +200 °C<br>PTFE - 196 / +250 °C<br>KALREZ - 20 / +275°C<br>METAL - 196 / +450 °C |
| Connessione Entrata *Inlet Connection* | G.3/8"-1/2"-3/4"-1"ISO228<br>R3/8"-1/2"-3/4"-1"EN10226<br>3/8" - 1/2" - 3/4" - 1" NPT<br>DN15-20-25 PN16-40<br>1/2" - 3/4" - 1" 150-300 lb<br>/<br>/ | G.3/8"-1/2"-3/4"-1"ISO228<br>R3/8"-1/2"-3/4"-1"EN10226<br>3/8" - 1/2" - 3/4" - 1" NPT<br>1" - 1"1/2 Tri Clamp<br>DN25 DIN405-11851<br>DN15-20-25 PN16-40<br>1/2" - 3/4" - 1" 150-300 lb | G.3/8"-1/2"-3/4"-1"ISO228<br>R3/8"-1/2"-3/4"-1"EN10226<br>3/8" - 1/2" - 3/4" - 1" NPT<br>1" - 1"1/2 Tri Clamp<br>DN25 DIN405-11851<br>DN15-20-25 PN16-40<br>1/2" - 3/4" - 1" 150-300 lb |
| Connessione Uscita *Outlet Connection* | G.1" ISO228<br>DN25 PN16-40<br>1" 150-300 lb<br>/<br>/<br>/<br>/ | G.1" ISO228<br>1" - 1"1/2 Tri Clamp<br>DN25 DIN405-11851<br>DN25 PN16-40<br>1" 150-300 lb<br>/<br>/ | G.1" ISO228<br>1" - 1"1/2 Tri Clamp<br>DN25 DIN405-11851<br>DN25 PN16-40<br>1" 150-300 lb<br>/<br>/ |

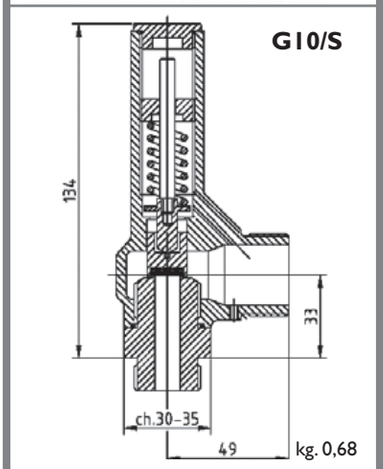


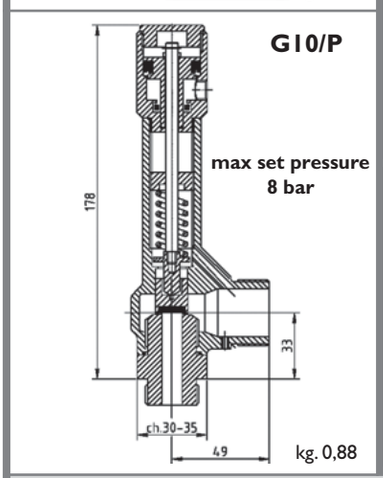


A richiesta possono essere eseguiti collaudi dai più prestigiosi enti quali: INAIL (area ISPESL), TÜV, RINA, Bureau Veritas, ABS e Lloyd Register.
*On request tests can be made by the most prestigious societies, such as: INAIL (area ISPELS), TÜV, RINA, Bureau Veritas, ABS and Lloyd Register.*

*Note: (1) No Modello Con leva / No Model With lever*

# SCARICO CONVOGLIATO / *PIPED OUTLET*

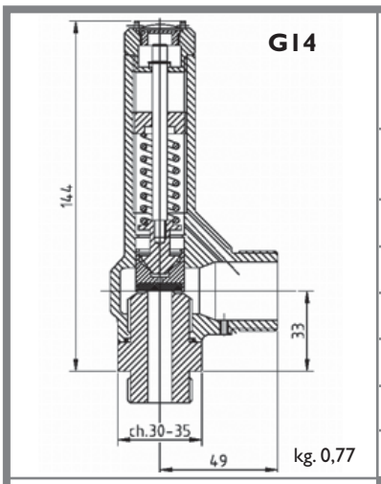


kg. 0,77

| Tipo: / *Type:* | G14 | do: 13,5 mm | |
|---|---|---|---|
| **Omologazione** *Homologation* | **PN** | **Coefficiente efflusso ridotto** *Low flow coefficient* | **Campo di taratura** *Setting range* |
| E.D. 2014/68/UE IV^ Cat.(PED) | 60 | 0,81; >3 bar 0,86 | 0,3 - 60,0 bar |
| EAC | 60 | 0,81; >3 bar 0,86 | 0,3 - 60,0 bar |
| ATEX Ex h II 2 G | 60 | 0,81; >3 bar 0,86 | 0,3 - 60,0 bar |
| ATEX Ex h II 2 D (1) | 60 | 0,81; >3 bar 0,86 | 0,3 - 60,0 bar |
| ASME VIII Div.1 | 60 | 0,629 | 1,0 - 60,0 bar |
| Canadian Reg. CRN | 60 | 0,629 | 1,0 - 60,0 bar |

## CONFIGURAZIONE - *CONFIGURATION*

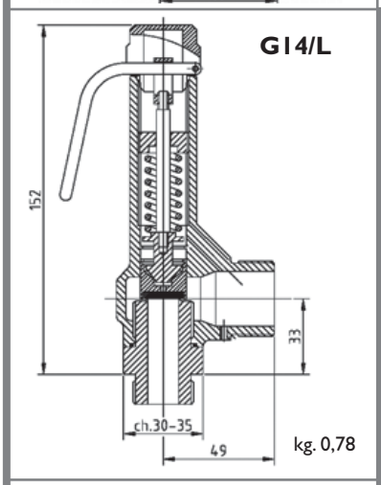


kg. 0,78

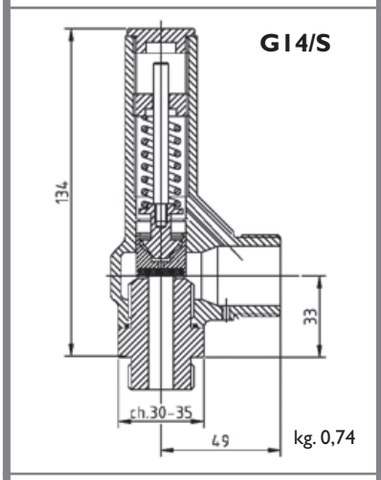


kg. 0,74

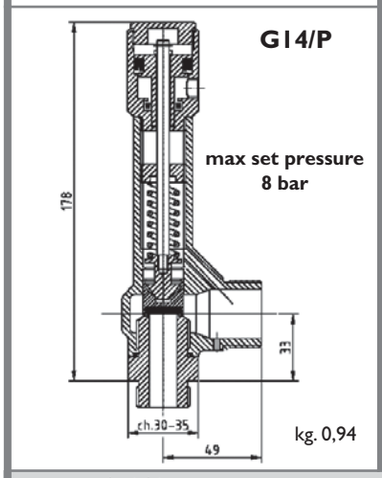


max set pressure
8 bar

kg. 0,94

| Materiale / *Material* | Ottone / *Brass* | Mista Ottone - Acciaio inox *Mixed Brass - Stailnes steel* | Acciaio inox *Stailnes steel* |
|---|---|---|---|
| Modelli / *Model* | Con ghiera *With ring nut* | Con ghiera *With ring nut* | Con ghiera *With ring nut* |
| | Senza ghiera *Without ring nut* | Senza ghiera *Without ring nut* | Senza ghiera *Without ring nut* |
| | Con leva With lever | Con leva With lever | Con leva With lever |
| | / / | / / | Con apertura pneumatica With pneumatic opening |
| | / / | / / | Pneumatica con sensore Pneumatic with sensor |
| Sedi di Tenuta *Seal System* | N.B.R. (Std) -10 / + 100 °C<br>E.P.D.M. - 50 / + 150 °C<br>VITON - 20 / +200 °C<br>SILICONE - 60 / +200 °C<br>PTFE - 196 / +250 °C<br>KALREZ - 20 / +250 °C<br>/ | N.B.R. (Std) -10 / + 100 °C<br>E.P.D.M. - 50 / + 150 °C<br>VITON - 20 / +200 °C<br>SILICONE - 60 / +200 °C<br>PTFE - 196 / +250 °C<br>KALREZ - 20 / +250 °C<br>Metal -196 / +250 °C | N.B.R. (Std) -10 / + 100 °C<br>E.P.D.M. - 50 / + 150 °C<br>VITON - 20 / +200 °C<br>SILICONE - 60 / +200 °C<br>PTFE -196 / +250 °C<br>KALREZ - 20 / +275 °C<br>Metal -196 / +450 °C |
| Connessione Entrata *Inlet Connection* | G.1/2" - 3/4" - 1" ISO228<br>G.3/4" ISO228 F<br>R.1/2" - 3/4" - 1" EN10226<br>1/2" - 3/4" - 1" NPT<br>DN20 - 25 PN16 - 40 - 60<br>3/4" - 1" 150 - 300 lb<br>/<br>/ | G.1/2" - 3/4" - 1" ISO228<br>G.3/4" ISO228 F<br>R.1/2" - 3/4" - 1" EN10226<br>1/2" - 3/4" - 1" NPT<br>1" - 1"1/2 Tri Clamp<br>DN25 DIN405 - 11851<br>DN20 - 25 PN16 - 40 - 60<br>3/4" - 1" 150 - 300 lb | G.1/2" - 3/4" - 1" ISO228<br>G.3/4" ISO228 F<br>R.1/2" - 3/4" - 1" EN10226<br>1/2" - 3/4" - 1" NPT<br>1" - 1"1/2 Tri Clamp<br>DN25 DIN405 - 11851<br>DN20 - 25 PN16 - 40 - 60<br>3/4" - 1" 150 - 300 lb |
| Connessione Uscita *Outlet Connection* | G.1" ISO228<br>DN25 PN16 - 40 - 60<br>1" 150 - 300 lb<br>/<br>/<br>/<br>/ | G.1" ISO228<br>1"1/2 Tri Clamp<br>DN25 DIN405 - 11851<br>DN25 PN16 - 40 - 60<br>1" 150 - 300 lb<br>/<br>/ | G.1" ISO228<br>1"1/2 Tri Clamp<br>DN25 DIN405 - 11851<br>DN25 PN16 - 40 - 60<br>1" 150 - 300 lb<br>/<br>/ |

A richiesta possono essere eseguiti collaudi dai più prestigiosi enti quali: INAIL (area ISPESL), TÜV, RINA, Bureau Veritas, ABS e Lloyd Register.
*On request tests can be made by the most prestigious societies, such as: INAIL (area ISPELS), TÜV, RINA, Bureau Veritas, ABS and Lloyd Register.*

*Note: (1) No Modello Con leva / No Model With lever*

# SCARICO CONVOGLIATO / *PIPED OUTLET*

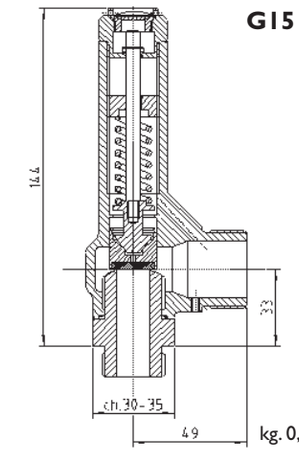


**G15**

kg. 0,76

| **Tipo: / *Type:*** | **G15** | **do: 15 mm** | |
|---|---|---|---|
| **Omologazione** *Homologation* | **PN** | **Coefficiente efflusso ridotto** *Low flow coefficient* | **Campo di taratura** *Setting range* |
| **E.D. 2014/68/UE IV^ Cat.(PED)** | **25** | **0,69** | **0,3 - 16,0 bar** |
| **EAC** | **25** | **0,69** | **0,3 - 16,0 bar** |
| **ATEX Ex h II 2 G** | **25** | **0,69** | **0,3 - 16,0 bar** |
| **ATEX Ex h II 2 D (1)** | **25** | **0,69** | **0,3 - 16,0 bar** |
| **ASME VIII Div.1** | / | / | / |
| **Canadian Reg. CRN** | / | / | / |

## CONFIGURAZIONE - *CONFIGURATION*

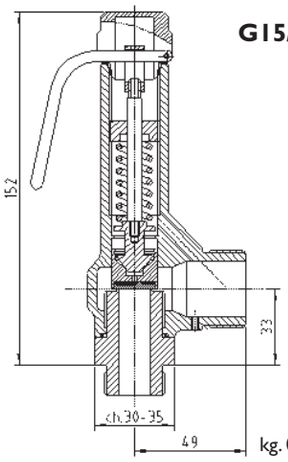


**G15/L**

kg. 0,77

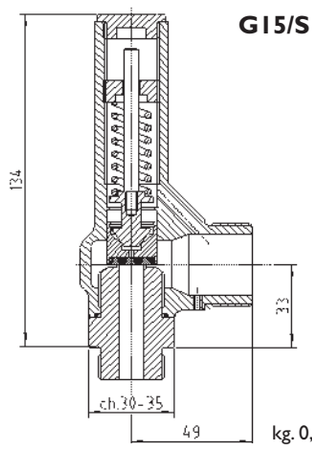


**G15/S**

kg. 0,73

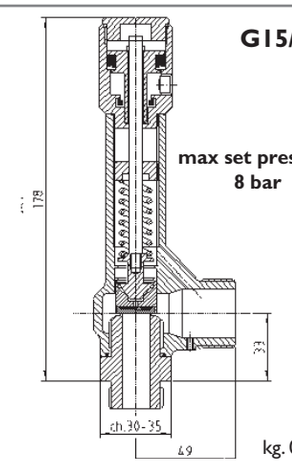


**G15/P**

**max set pressure 8 bar**

kg. 0,93

| **Materiale / *Material*** | **Ottone / *Brass*** | **Mista Ottone - Acciaio inox** *Mixed Brass - Stailnes steel* | **Acciaio inox** *Stailnes steel* |
|---|---|---|---|
| **Modelli / *Model*** | **Con ghiera** *With ring nut* | **Con ghiera** *With ring nut* | **Con ghiera** *With ring nut* |
| | **Senza ghiera** *Without ring nut* | **Senza ghiera** *Without ring nut* | **Senza ghiera** *Without ring nut* |
| | **Con leva** **With lever** | **Con leva** **With lever** | **Con leva** **With lever** |
| | / / | / / | **Con apertura pneumatica** **With pneumatic opening** |
| | / / | / / | **Pneumatica con sensore** **Pneumatic with sensor** |
| **Sedi di Tenuta** *Seal System* | N.B.R. (Std) - 10 / + 100 °C<br>E.P.D.M. - 50 / + 150 °C<br>VITON - 20 / +200 °C<br>SILICONE - 60 / +200 °C<br>PTFE - 196 / +250 °C<br>KALREZ - 20 / +250 °C<br>/ | N.B.R. (Std) - 10 / + 100 °C<br>E.P.D.M. - 50 / + 150 °C<br>VITON - 20 / +200 °C<br>SILICONE - 60 / +200 °C<br>PTFE - 196 / +250 °C<br>KALREZ - 20 / +250 °C<br>METAL - 196 / +250 °C | N.B.R. (Std) - 10 / + 100 °C<br>E.P.D.M. - 50 / + 150 °C<br>VITON - 20 / +200 °C<br>SILICONE - 60 / +200 °C<br>PTFE - 196 / +250 °C<br>KALREZ - 20 / +275°C<br>METAL - 196 / +450 °C |
| **Connessione Entrata** *Inlet Connection* | G.1/2" - 3/4" - 1" ISO228<br>R.1/2" - 3/4" - 1" EN10226<br>1/2" - 3/4" - 1" NPT<br>DN20-25 PN16-40<br>3/4" - 1" 150-300 lb<br>/<br>/ | G.1/2" - 3/4" - 1" ISO228<br>R.1/2" - 3/4" - 1" EN10226<br>1/2" - 3/4" - 1" NPT<br>1" - 1"1/2 Tri Clamp<br>DN25 DIN405-11851<br>DN20-25 PN16-40<br>3/4" - 1" 150-300 lb | G.1/2" - 3/4" - 1" ISO228<br>R.1/2" - 3/4" - 1" EN10226<br>1/2" - 3/4" - 1" NPT<br>1" - 1"1/2 Tri Clamp<br>DN25 DIN405-11851<br>DN20-25 PN16-40<br>3/4"- 1" 150-300 lb |
| **Connessione Uscita** *Outlet Connection* | G.1" ISO228<br>DN25 PN16-40<br>1" 150-300 lb<br>/<br>/<br>/<br>/ | G.1" ISO228<br>1"1/2 Tri Clamp<br>DN25 DIN405-11851<br>DN25 PN16-40<br>1" 150-300 lb /<br>/ | G.1" ISO228<br>1"1/2 Tri Clamp<br>DN25 DIN405-11851<br>DN25 PN16-40<br>1" 150-300 lb<br>/<br>/ |

A richiesta possono essere eseguiti collaudi dai più prestigiosi enti quali: INAIL (area ISPESL), TÜV, RINA, Bureau Veritas, ABS e Lloyd Register.
*On request tests can be made by the most prestigious societies, such as: INAIL (area ISPELS), TÜV, RINA, Bureau Veritas, ABS and Lloyd Register.*

*Note: (1) No Modello Con leva / No Model With lever*

# SCARICO CONVOGLIATO / *PIPED OUTLET*

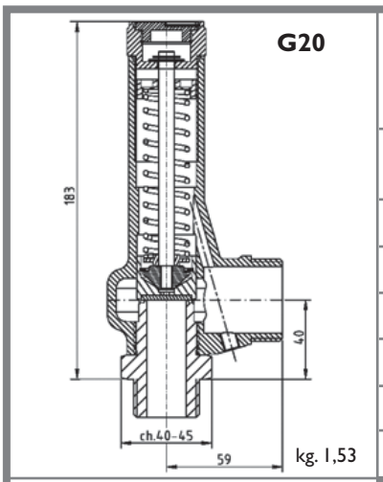


| Tipo: / *Type:* | G20 | do: 20 mm | |
|---|---|---|---|
| **Omologazione** *Homologation* | **PN** | **Coefficiente efflusso ridotto** *Low flow coefficient* | **Campo di taratura** *Setting range* |
| **E.D. 2014/68/UE IV^ Cat.(PED)** | **60** | **0,83** | **0,3 - 60,0 bar** |
| **EAC** | **60** | **0,83** | **0,3 - 60,0 bar** |
| **ATEX Ex h II 2 G** | **60** | **0,83** | **0,3 - 60,0 bar** |
| **ATEX Ex h II 2 D (1)** | **60** | **0,83** | **0,3 - 60,0 bar** |
| **ASME VIII Div.1** | **60** | **0,629** | **1,0 - 60,0 bar** |
| **Canadian Reg. CRN** | **60** | **0,629** | **1,0 - 60,0 bar** |

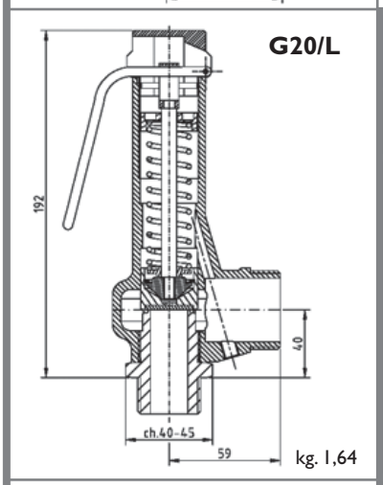


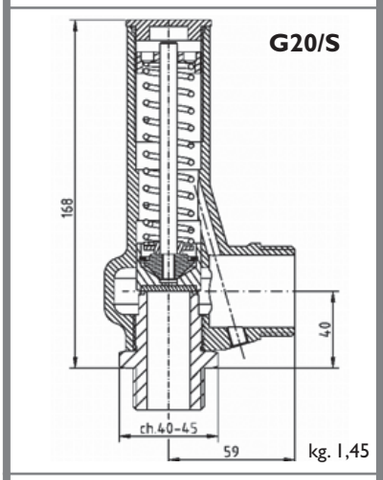


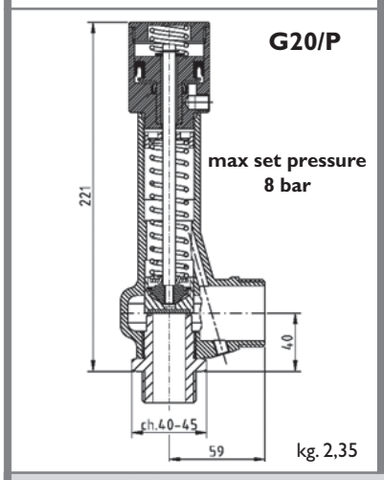


## CONFIGURAZIONE - *CONFIGURATION*

| **Materiale / *Material*** | **Ottone / *Brass*** | **Mista Ottone - Acciaio inox** *Mixed Brass - Stailnes steel* | **Acciaio inox** *Stailnes steel* |
|---|---|---|---|
| **Modelli / *Model*** | **Con ghiera** *With ring nut* | **Con ghiera** *With ring nut* | **Con ghiera** *With ring nut* |
| | **Senza ghiera** *Without ring nut* | **Senza ghiera** *Without ring nut* | **Senza ghiera** *Without ring nut* |
| | **Con leva** **With lever** | **Con leva** **With lever** | **Con leva** **With lever** |
| | / / | / / | **Con apertura pneumatica** **With pneumatic opening** |
| | / / | / / | **Pneumatica con sensore** **Pneumatic with sensor** |
| **Sedi di Tenuta** *Seal System* | N.B.R. (Std) - 10 / + 100 °C | N.B.R. (Std) - 10 / + 100 °C | N.B.R. (Std) - 10 / + 100 °C |
| | E.P.D.M. - 50 / + 150 °C | E.P.D.M. - 50 / + 150 °C | E.P.D.M. - 50 / + 150 °C |
| | VITON - 20 / +200 °C | VITON - 20 / +200 °C | VITON - 20 / +200 °C |
| | SILICONE - 60 / +200 °C | SILICONE - 60 / +200 °C | SILICONE - 60 / +200 °C |
| | PTFE - 196 / +250 °C | PTFE - 196 / +250 °C | PTFE - 196 / +250 °C |
| | KALREZ - 20 / +250 °C | KALREZ - 20 / +250 °C | KALREZ - 20 / +275°C |
| | / | METAL - 196 / +250 °C | METAL - 196 / +450 °C |
| **Connessione Entrata** *Inlet Connection* | G.1" - 1"1/4 ISO228 | G.1" - 1"1/4 ISO228 | G.1" - 1"1/4 ISO228 |
| | G.1" - 1"1/4 ISO228 F | G.1" - 1"1/4 ISO228 F | G.1" - 1"1/4 ISO228 F |
| | R.1" - 1"1/4 EN10226 | R.1" - 1"1/4 EN10226 | R.1" - 1"1/4 EN10226 |
| | 1" - 1"1/4 NPT | 1" - 1"1/4 NPT | 1" - 1"1/4 NPT |
| | DN25 - 32 PN16 - 40 - 60 | 1" - 1"1/2 Tri Clamp | 1" -1"1/2 Tri Clamp |
| | 1" - 1"1/4 150 - 300 lb | DN25 - 32 - 40 DIN405 - 11851 | DN25 - 32-40 DIN405 - 11851 |
| | / | DN25 - 32 PN16 - 40 - 60 | DN25 - 32 PN16 - 40-60 |
| | / | 1" - 1"1/4 150 - 300 lb | 1" - 1"1/4 150 - 300 lb |
| **Connessione Uscita** *Outlet Connection* | **G.1"1/4 ISO228** | **G.1"1/4 ISO228** | **G.1"1/4 ISO228** |
| | **DN32-40 PN16-40-60** | **1"1/2 Tri Clamp** | **1"1/2 Tri Clamp** |
| | **1"1/4 - 1"1/2 150-300 lb** | **DN25-32-40 DIN405-11851** | **DN25-32-40 DIN405-11851** |
| | / | **DN32 - 40 PN16-40 - 60** | **DN32-40 PN16-40-60** |
| | / | **1"1/4 - 1"1/2 150 - 300 lb** | **1"1/4 -1"1/2 150-300 lb** |
| | / | / | / |
| | / | / | / |

A richiesta possono essere eseguiti collaudi dai più prestigiosi enti quali: INAIL (area ISPESL), TÜV, RINA, Bureau Veritas, ABS e Lloyd Register.
*On request tests can be made by the most prestigious societies, such as: INAIL (area ISPELS), TÜV, RINA, Bureau Veritas, ABS and Lloyd Register.*

*Note: (1) No Modello Con leva / No Model With lever*

# SCARICO CONVOGLIATO / *PIPED OUTLET*

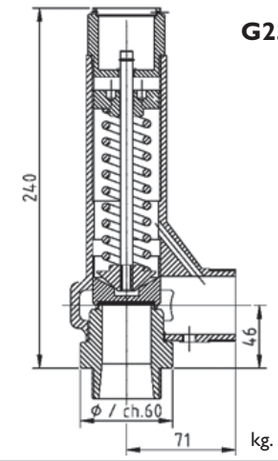


**G25**

kg. 3,38

| Tipo: / *Type:* | G25 | do: 25 mm | |
|---|---|---|---|
| **Omologazione** *Homologation* | **PN** | **Coefficiente efflusso ridotto** *Low flow coefficient* | **Campo di taratura** *Setting range* |
| E.D. 2014/68/UE IV^ Cat.(PED) | 60 | 0,78 | 0,3 - 60,0 bar |
| EAC | 60 | 0,78 | 0,3 - 60,0 bar |
| ATEX Ex h II 2 G | 60 | 0,78 | 0,3 - 60,0 bar |
| ATEX Ex h II 2 D (1) | 60 | 0,78 | 0,3 - 60,0 bar |
| ASME VIII Div.1 | 60 | 0,629 | 1,0 - 60,0 bar |
| Canadian Reg. CRN | 60 | 0,629 | 1,0 - 60,0 bar |

## CONFIGURAZIONE - *CONFIGURATION*

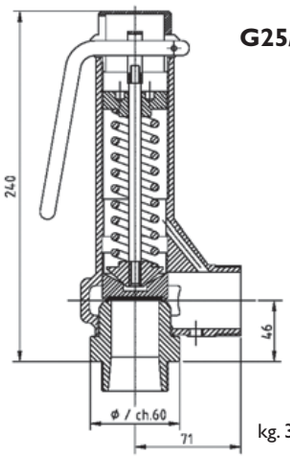


**G25/L**

kg. 3,30

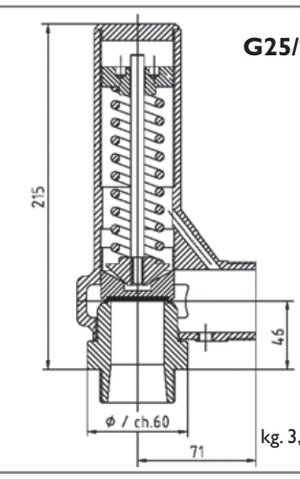


**G25/S**

kg. 3,10

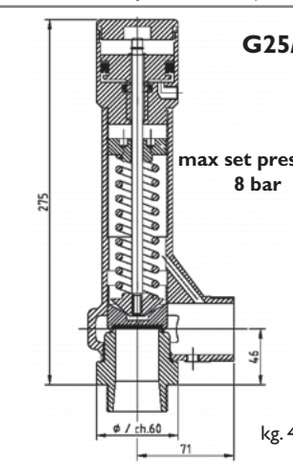


**G25/P**

max set pressure
8 bar

kg. 4,10

| Materiale / *Material* | Ottone / *Brass* | Mista Ottone - Acciaio inox *Mixed Brass - Stailnes steel* | Acciaio inox *Stailnes steel* |
|---|---|---|---|
| Modelli / *Model* | Con ghiera *With ring nut* | Con ghiera *With ring nut* | Con ghiera *With ring nut* |
| | Senza ghiera *Without ring nut* | Senza ghiera *Without ring nut* | Senza ghiera *Without ring nut* |
| | Con leva With lever | Con leva With lever | Con leva With lever |
| | / / | / / | Con apertura pneumatica With pneumatic opening |
| | / / | / / | Pneumatica con sensore Pneumatic with sensor |
| Sedi di Tenuta *Seal System* | N.B.R. (Std) -10 / + 100 °C | N.B.R. (Std) -10 / + 100 °C | N.B.R. (Std) -10 / + 100 °C |
| | E.P.D.M. - 50 / + 150 °C | E.P.D.M. - 50 / + 150 °C | E.P.D.M. - 50 / + 150 °C |
| | VITON - 20 / +200 °C | VITON - 20 / +200 °C | VITON - 20 / +200 °C |
| | SILICONE - 60 / +200 °C | SILICONE - 60 / +200 °C | SILICONE - 60 / +200 °C |
| | PTFE - 196 / +250 °C | PTFE - 196 / +250 °C | PTFE -196 / +250 °C |
| | KALREZ - 20 / +250 °C | KALREZ - 20 / +250 °C | KALREZ - 20 / +275 °C |
| | / | Metal -196 / +250 °C | Metal -196 / +450 °C |
| Connessione Entrata *Inlet Connection* | G.1"1/4 - 1"1/2 ISO228 | G.1"1/4 - 1"1/2 ISO228 | G.1"1/4 - 1"1/2 ISO228 |
| | G.1"1/2 ISO228 F | G.1"1/2 ISO228 F | G.1"1/2 ISO228 F |
| | R.1"1/4 - 1"1/2 EN10226 | R.1"1/4 - 1"1/2 EN10226 | R.1"1/4 - 1"1/2 EN10226 |
| | 1"1/4 - 1"1/2 NPT | 1"1/4 - 1"1/2 NPT | 1"1/4 - 1"1/2 NPT |
| | DN32-40 PN16-40-60 | 1"1/2 Tri Clamp | 1"1/2 Tri Clamp |
| | 1"1/4 - 1"1/2 150-300 lb | DN25-32-40 DIN405-11851 | DN25-32-40 DIN405-11851 |
| | / | DN32-40 PN16-40-60 | DN32-40 PN16-40-60 |
| | / | 1"1/4 - 2" 150-300 lb | 1"1/4 - 2" 150-300 lb |
| Connessione Uscita *Outlet Connection* | G.1"1/2 ISO228 | G.1"1/2 ISO228 | G.1"1/2 ISO228 |
| | DN40-50 PN16-40-60 | 1"1/2 Tri Clamp | 1"1/2 Tri Clamp |
| | 1"1/2 - 2" 150-300 lb | DN32-40 DIN405-11851 | DN32-40 DIN405-11851 |
| | / | DN40-50 PN16-40-60 | DN40-50 PN16-40-60 |
| | / | 1"1/2 - 2" 150-300 lb | 1"1/2 - 2" 150-300 lb |
| | / | / | / |
| | / | / | / |

A richiesta possono essere eseguiti collaudi dai più prestigiosi enti quali: INAIL (area ISPESL), TÜV, RINA, Bureau Veritas, ABS e Lloyd Register.
*On request tests can be made by the most prestigious societies, such as: INAIL (area ISPELS), TÜV, RINA, Bureau Veritas, ABS and Lloyd Register.*

*Note: (1) No Modello Con leva / No Model With lever*

# SCARICO CONVOGLIATO / *PIPED OUTLET*

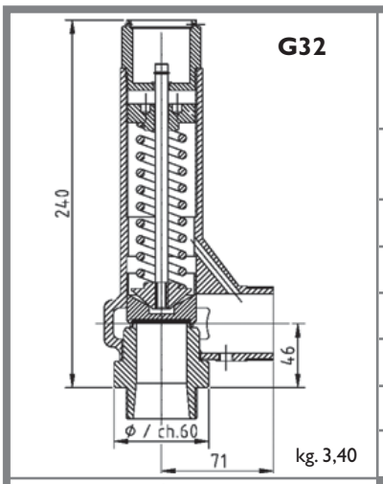


| Tipo: / *Type:* | G32 | do: 32 mm | |
|---|---|---|---|
| **Omologazione** *Homologation* | **PN** | **Coefficiente efflusso ridotto** *Low flow coefficient* | **Campo di taratura** *Setting range* |
| E.D. 2014/68/UE IV^ Cat.(PED) | 40 | 0,53 | 0,3 - 14,0 bar |
| EAC | 40 | 0,53 | 0,3 - 14,0 bar |
| ATEX Ex h II 2 G | 40 | 0,53 | 0,3 - 14,0 bar |
| ATEX Ex h II 2 D (1) | 40 | 0,53 | 0,3 - 14,0 bar |
| ASME VIII Div.1 | 40 | 0,629 | 1,0 - 14,0 bar |
| Canadian Reg. CRN | 40 | 0,629 | 1,0 - 14,0 bar |

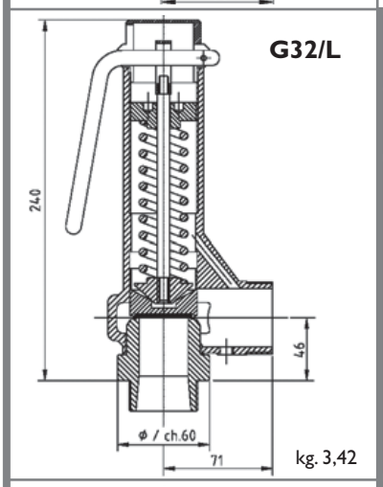


## CONFIGURAZIONE - *CONFIGURATION*

| Materiale / *Material* | Ottone / *Brass* | Mista Ottone - Acciaio inox *Mixed Brass - Stailnes steel* | Acciaio inox *Stailnes steel* |
|---|---|---|---|
| Modelli / *Model* | Con ghiera *With ring nut* | Con ghiera *With ring nut* | Con ghiera *With ring nut* |
| | Senza ghiera *Without ring nut* | Senza ghiera *Without ring nut* | Senza ghiera *Without ring nut* |
| | Con leva With lever | Con leva With lever | Con leva With lever |
| | / / | / / | Con apertura pneumatica With pneumatic opening |
| | / / | / / | Pneumatica con sensore Pneumatic with sensor |

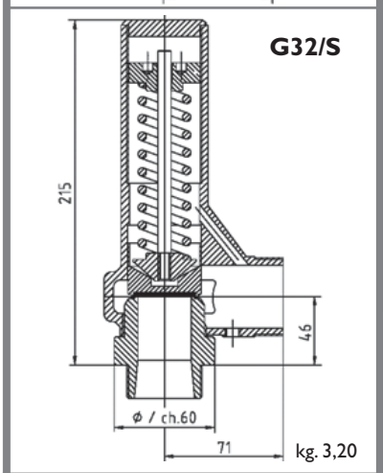


| | | | |
|---|---|---|---|
| Sedi di Tenuta *Seal System* | N.B.R. (Std) - 10 / + 100 °C<br>E.P.D.M. - 50 / + 150 °C<br>VITON - 20 / +200 °C<br>SILICONE - 60 / +200 °C<br>PTFE - 196 / +250 °C<br>KALREZ - 20 / +250 °C<br>/ | N.B.R. (Std) - 10 / + 100 °C<br>E.P.D.M. - 50 / + 150 °C<br>VITON - 20 / +200 °C<br>SILICONE - 60 / +200 °C<br>PTFE - 196 / +250 °C<br>KALREZ - 20 / +250 °C<br>METAL - 196 / +250 °C | N.B.R. (Std) - 10 / + 100 °C<br>E.P.D.M. - 50 / + 150 °C<br>VITON - 20 / +200 °C<br>SILICONE - 60 / +200 °C<br>PTFE - 196 / +250 °C<br>KALREZ - 20 / +275°C<br>METAL - 196 / +450 °C |
| Connessione Entrata *Inlet Connection* | G.1"1/2 - 2" ISO228<br>R.1"1/2 - 2" EN10226<br>1"1/2 - 2" NPT<br>DN40-50 PN16-40<br>1"1/2 - 2" 150-300 lb<br>/<br>/ | G.1"1/2 - 2" ISO228<br>R.1"1/2 - 2" EN10226<br>1"1/2 - 2" NPT<br>1"1/2 - 2" Tri Clamp<br>DN32-40-50 DIN405-11851<br>DN40-50 PN16-40<br>1"1/2 - 2" 150-300 lb | G.1"1/2 - 2" ISO228<br>R.1"1/2 - 2" EN10226<br>1"1/2 - 2" NPT<br>1"1/2 - 2" Tri Clamp<br>DN32-40-50 DIN405-11851<br>DN40-50 PN16-40<br>1"1/2 - 2" 150-300 lb |
| Connessione Uscita *Outlet Connection* | G.1"1/2 ISO228<br>DN40-50 PN16-40<br>1"1/2 - 2" 150-300 lb<br>/<br>/<br>/<br>/ | G.1"1/2 ISO228<br>1"1/2 - 2" Tri Clamp<br>DN40-50 DIN405-11851<br>DN40-50 PN16-40<br>1"1/2 - 2" 150-300 lb<br>/<br>/ | G.1"1/2 ISO228<br>1"1/2 - 2" Tri Clamp<br>DN40-50 DIN405-11851<br>DN40-50 PN16-40<br>1"1/2 - 2" 150-300 lb<br>/<br>/ |

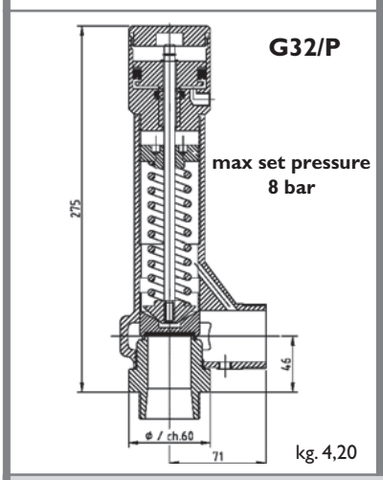


A richiesta possono essere eseguiti collaudi dai più prestigiosi enti quali: INAIL (area ISPESL), TÜV, RINA, Bureau Veritas, ABS e Lloyd Register.
*On request tests can be made by the most prestigious societies, such as: INAIL (area ISPELS), TÜV, RINA, Bureau Veritas, ABS and Lloyd Register.*

*Note: (1) No Modello Con leva / No Model With lever*

# SCARICO CONVOGLIATO / *PIPED OUTLET*

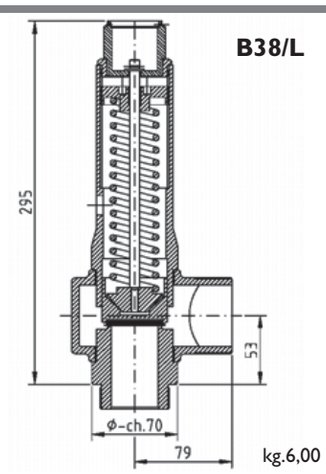


| Tipo: / *Type:* | B38/ L | do: 38 mm | |
|---|---|---|---|
| **Omologazione** *Homologation* | **PN** | **Coefficiente efflusso ridotto** *Low flow coefficient* | **Campo di taratura** *Setting range* |
| E.D. 2014/68/UE IV^ Cat.(PED) | 40 | 0,76 | 0,3 -30,0 bar |
| EAC | 40 | 0,76 | 0,3 - 30,0 bar |
| ATEX Ex h II 2 G | 40 | 0,76 | 0,3 - 30,0 bar |
| ATEX Ex h II 2 D (1) | 40 | 0,76 | 0,3 - 30,0 bar |
| ASME VIII Div.1 | 40 | 0,629 | 1,0 - 30,0 bar |
| Canadian Reg. CRN | 40 | 0,629 | 1,0 - 30,0 bar |

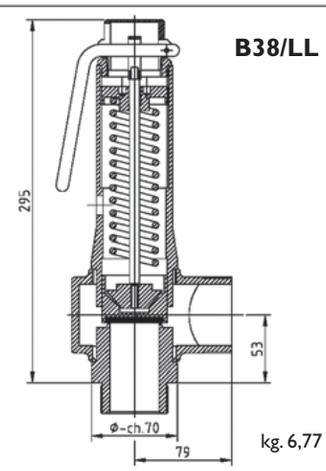


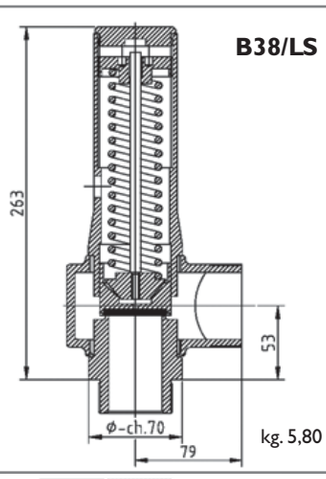


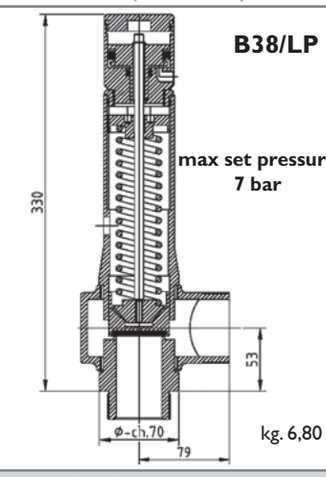


## CONFIGURAZIONE - *CONFIGURATION*

| Materiale / *Material* | Ottone / *Brass* | Mista Ottone - Acciaio inox *Mixed Brass - Stailnes steel* | Acciaio inox *Stailnes steel* |
|---|---|---|---|
| Modelli / *Model* | Con ghiera *With ring nut* | Con ghiera *With ring nut* | Con ghiera *With ring nut* |
| | Senza ghiera *Without ring nut* | Senza ghiera *Without ring nut* | Senza ghiera *Without ring nut* |
| | Con leva With lever | Con leva With lever | Con leva With lever |
| | / / | / / | Con apertura pneumatica With pneumatic opening |
| | / / | / / | Pneumatica con sensore Pneumatic with sensor |
| Sedi di Tenuta *Seal System* | N.B.R. (Std) -10 / + 100 °C | N.B.R. (Std) -10 / + 100 °C | N.B.R. (Std) -10 / + 100 °C |
| | E.P.D.M. - 50 / + 150 °C | E.P.D.M. - 50 / + 150 °C | E.P.D.M. - 50 / + 150 °C |
| | VITON - 20 / +200 °C | VITON - 20 / +200 °C | VITON - 20 / +200 °C |
| | SILICONE - 60 / +200 °C | SILICONE - 60 / +200 °C | SILICONE - 60 / +200 °C |
| | PTFE - 196 / +250 °C | PTFE - 196 / +250 °C | PTFE -196 / +250 °C |
| | KALREZ - 20 / +250 °C | KALREZ - 20 / +250 °C | KALREZ - 20 / +275 °C |
| | / | Metal -196 / +250 °C | Metal -196 / +450 °C |
| Connessione Entrata *Inlet Connection* | G.1"1/2 - 2" ISO228 | G.1"1/2 - 2" ISO228 | G.1"1/2 - 2" ISO228 |
| | R.1"1/2 - 2" EN10226 | R.1"1/2 - 2" EN10226 | R.1"1/2 - 2" EN10226 |
| | 1"1/2 - 2" NPT | 1"1/2 - 2" NPT | 1"1/2 - 2" NPT |
| | DN50 PN16-40 | 2" Tri Clamp | 2" Tri Clamp |
| | 2" 150-300 lb | DN40-50 DIN405-11851 | DN40-50 DIN405-11851 |
| | / | DN50 PN16-40 | DN50 PN16-40 |
| | / | 2" 150-300 lb | 2" 150-300 lb |
| Connessione Uscita *Outlet Connection* | G.2" ISO228 | G.2" ISO228 | G.2" ISO228 |
| | DN50-65 PN16-40 | 2" Tri Clamp | 2" Tri Clamp |
| | 2" - 2"1/2 150-300 lb | DN50 DIN405-11851 | DN50 DIN405-11851 |
| | / | DN50-65 PN16-40 | DN50-65 PN16-40 |
| | / | 2" - 2"1/2 150-300 lb | 2" - 2"1/2 150-300 lb |
| | / | / | / |
| | / | / | / |

A richiesta possono essere eseguiti collaudi dai più prestigiosi enti quali: INAIL (area ISPESL), TÜV, RINA, Bureau Veritas, ABS e Lloyd Register.
*On request tests can be made by the most prestigious societies, such as: INAIL (area ISPELS), TÜV, RINA, Bureau Veritas, ABS and Lloyd Register.*

*Note: (1) No Modello Con leva / No Model With lever*

# SCARICO CONVOGLIATO / *PIPED OUTLET*

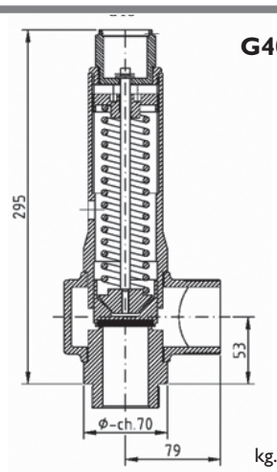


**G40**

kg. 5,70

| **Tipo: / *Type:*** | **G40** | **do: 40 mm** | |
|---|---|---|---|
| **Omologazione** *Homologation* | **PN** | **Coefficiente efflusso ridotto** *Low flow coefficient* | **Campo di taratura** *Setting range* |
| **E.D. 2014/68/UE IV^ Cat.(PED)** | **40** | **0,61; >3 bar 0,71** | **0,3 - 14,0 bar** |
| **EAC** | **40** | **0,61; >3 bar 0,71** | **0,3 - 14,0 bar** |
| **ATEX Ex h II 2 G** | **40** | **0,61; >3 bar 0,71** | **0,3 - 14,0 bar** |
| **ATEX Ex h II 2 D (1)** | **40** | **0,61; >3 bar 0,71** | **0,3 - 14,0 bar** |
| **ASME VIII Div.1** | **40** | **0,629** | **1,0 - 14,0 bar** |
| **Canadian Reg. CRN** | **40** | **0,629** | **1,0 - 14,0 bar** |

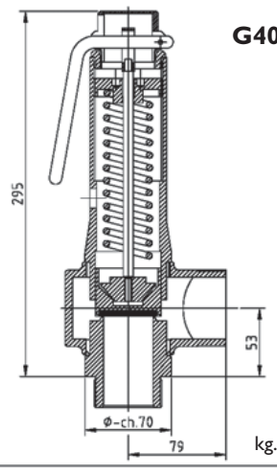


**G40/L**

kg. 6,47

## CONFIGURAZIONE - *CONFIGURATION*

| **Materiale / *Material*** | **Ottone / *Brass*** | **Mista Ottone - Acciaio inox** *Mixed Brass - Stailnes steel* | **Acciaio inox** *Stailnes steel* |
|---|---|---|---|
| **Modelli / *Model*** | **Con ghiera** *With ring nut* | **Con ghiera** *With ring nut* | **Con ghiera** *With ring nut* |
| | **Senza ghiera** *Without ring nut* | **Senza ghiera** *Without ring nut* | **Senza ghiera** *Without ring nut* |
| | **Con leva** **With lever** | **Con leva** **With lever** | **Con leva** **With lever** |
| | / / | / / | **Con apertura pneumatica** **With pneumatic opening** |
| | / / | / / | **Pneumatica con sensore** **Pneumatic with sensor** |

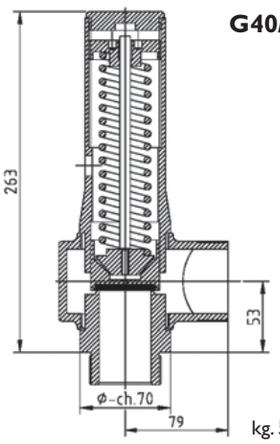


**G40/S**

kg. 5,50

| | | | |
|---|---|---|---|
| **Sedi di Tenuta** *Seal System* | N.B.R. (Std) - 10 / + 100 °C | N.B.R. (Std) - 10 / + 100 °C | N.B.R. (Std) - 10 / + 100 °C |
| | E.P.D.M. - 50 / + 150 °C | E.P.D.M. - 50 / + 150 °C | E.P.D.M. - 50 / + 150 °C |
| | VITON - 20 / +200 °C | VITON - 20 / +200 °C | VITON - 20 / +200 °C |
| | SILICONE - 60 / +200 °C | SILICONE - 60 / +200 °C | SILICONE - 60 / +200 °C |
| | PTFE - 196 / +250 °C | PTFE - 196 / +250 °C | PTFE - 196 / +250 °C |
| | KALREZ - 20 / +250 °C | KALREZ - 20 / +250 °C | KALREZ - 20 / +275°C |
| | / | METAL - 196 / +250 °C | METAL - 196 / +450 °C |
| **Connessione Entrata** *Inlet Connection* | G.1"1/2 - 2" ISO228 | G.1"1/2 - 2" ISO228 | G.1"1/2 - 2" ISO228 |
| | R.1"1/2 - 2" EN10226 | R.1"1/2 - 2" EN10226 | R.1"1/2 - 2" EN10226 |
| | 1"1/2 - 2" NPT | 1"1/2 - 2" NPT | 1"1/2 - 2" NPT |
| | DN50 PN16-40 | 2" Tri Clamp | 2" Tri Clamp |
| | 2" 150-300 lb | DN40-50 DIN405-11851 | DN40-50 DIN405-11851 |
| | / | DN50 PN16-40 | DN50 PN16-40 |
| | / | 2" 150-300 lb | 2" 150-300 lb |
| **Connessione Uscita** *Outlet Connection* | G.2" ISO228 | G.2" ISO228 | G.2" ISO228 |
| | DN50-65 PN16-40 | 2" Tri Clamp | 2" Tri Clamp |
| | 2" - 2"1/2 150-300 lb | DN50 DIN405-11851 | DN50 DIN405-11851 |
| | / | DN50-65 PN16-40 | DN50-65 PN16-40 |
| | / | 2" - 2"1/2 150-300 lb | 2" - 2"1/2 150-300 lb |
| | / | / | / |
| | / | / | / |

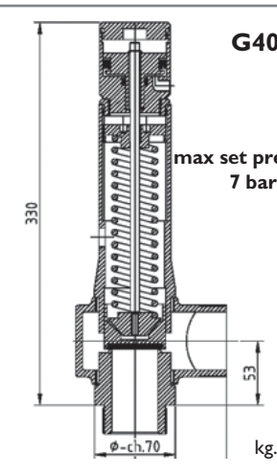


**G40/P**

**max set pressure 7 bar**

kg. 6,50

A richiesta possono essere eseguiti collaudi dai più prestigiosi enti quali: INAIL (area ISPESL), TÜV, RINA, Bureau Veritas, ABS e Lloyd Register.
*On request tests can be made by the most prestigious societies, such as: INAIL (area ISPELS), TÜV, RINA, Bureau Veritas, ABS and Lloyd Register.*

*Note: (1) No Modello Con leva / No Model With lever*

SAFETY

## **SCARICO CONVOGLIATO** / *PIPED OUTLET*