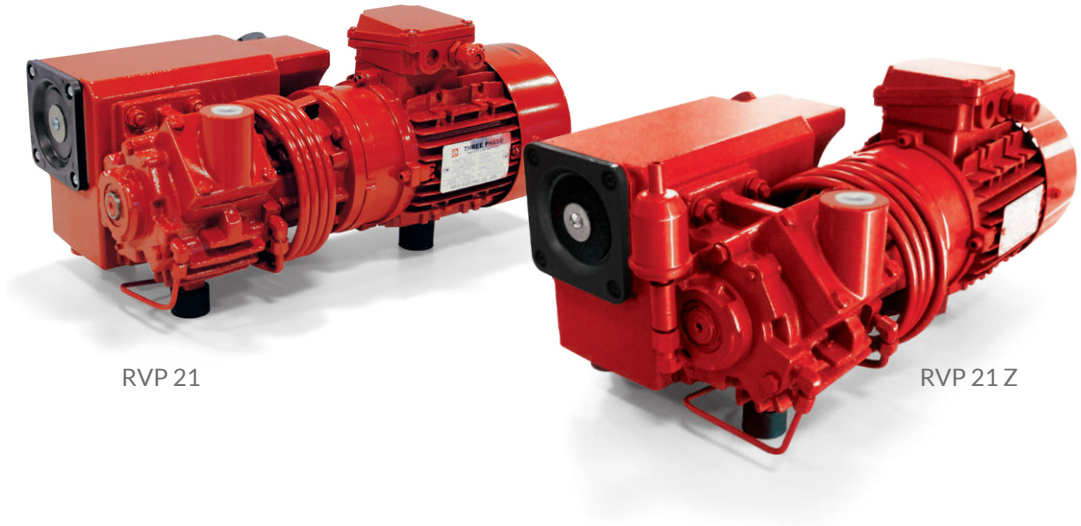

RVP 21 RVP 21 Z

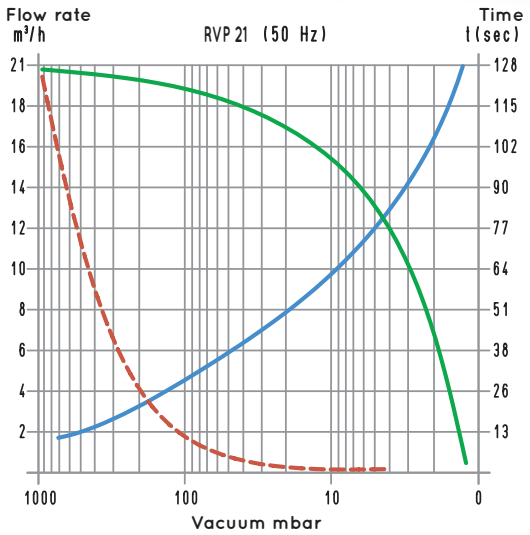


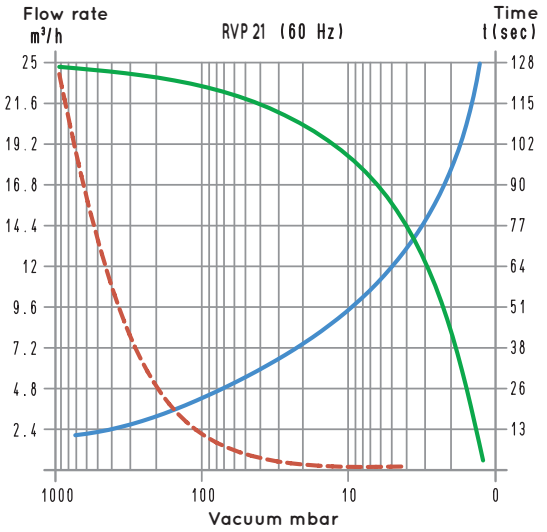


To calculate the emptying time of a volume of $V_1$, use the following formula: $t_1 = \frac{t \times V_1}{100}$

- Curve relative to the flow rate (referring to the suction pressure)
- Curve relative to the flow rate (referring to a 1013 mbar pressure)
- Curve regarding the emptying time of a 100-litre volume

$V_1$: Volume to be emptied ( l )
$t_1$ : time to be calculated (sec)
$t$ : time obtained in the table (sec)

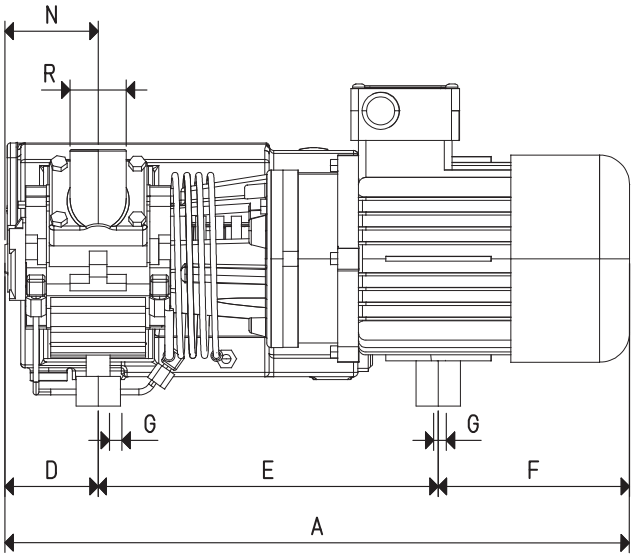


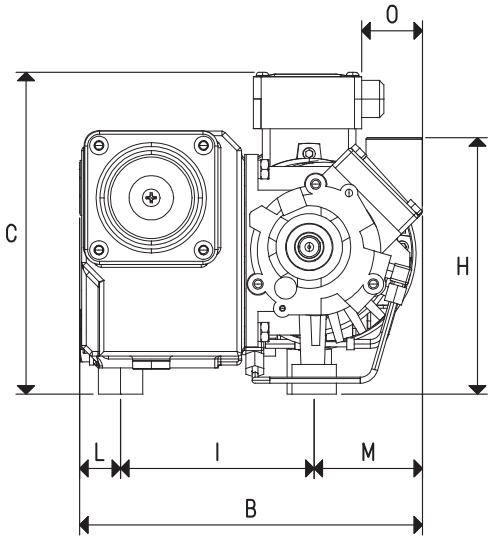


| Item | | RVP 21 | | |
|---|---|---|---|---|
| **Frequency** | | 50 Hz | | 60 Hz |
| **Flow rate** | $m^3/h$ | 21.0 | | 25.0 |
| **Final pressure** | mbar abs. | | 1 | |
| **Motor performance** | 3~ | 230/400 ± 10% | | 275/480 ± 10% |
| **Volt** | 1~ | 230 ± 10% | | 275 ± 10% |
| **Motor power** | 3~ | 0.75 | | 0.90 |
| **Kw** | 1~ | 0.75 | | 0.90 |
| **Motor protection** | IP | | 55 | |
| **Rotation speed** | $g/min^{-1}$ | 2700 | | 3240 |
| **Motor shape** | | | B14 | |
| **Motor size** | | | 90 | |
| **Noise level** | dB(A) | 64 | | 65 |
| **Max weight** | 3~ | | 18.5 | |
| **Kg** | 1~ | | 19.0 | |
| **A** | | | 421 | |
| **B** | | | 232 | |
| **C** | | | 225 | |
| **D** | | | 63 | |
| **E** | | | 230 | |
| **F** | | | 128 | |
| **G** | Ø | | M8 | |
| **H** | | | 173 | |
| **I** | | | 131 | |
| **L** | | | 28 | |
| **M** | | | 73 | |
| **N** | | | 62 | |
| **O** | | | 41 | |
| **R** | Ø gas | | G1/2" | |

| Accessories and Parts | | RVP 21 |
|---|---|---|
| **Oil charge** | L | 0.50 |
| **Lubricating oil** | type | VT OIL 68 |
| **Deoiling cartridge** | item | 00 RVP 21 05 |
| **3 vanes** | item | 00 RVP 21 04 |
| **Sealing kit** | item | 00 RVP 21 06 |
| **Check valve** | item | 00 RVP 21 03 |
| **Suction filter** | item | FC 20 |
| **Ballast valve** | item | VZR 01 |

Note: Add the letter M to the item for a pump supplied with a single-phase electric motor (Example: RVP 21 M).
Add the letter Z to the item for a pump supplied with a ballast valve (Example: RVP 21 Z).

Transformation ratio: N (newton) = Kg x 9.81 (force of gravity) inch = $\frac{mm}{25.4}$ ; pounds = $\frac{g}{453.6} = \frac{Kg}{0.4536}$ cfm= $m^3/h$ x 0.588; inch Hg= mbar x 0.0295; psi= bar x 14.6