FLANGE FIXING SUPPORT FOR OCTOPUS SYSTEMS WITHOUT VACUUM GENERATOR

The fixing supports described on this page have been designed to connect an OCTOPUS system to a remotely installed vacuum generator or to an alternative vacuum source.
The supports, made with anodised aluminium, have two flanges: one to be fixed on the OCTOPUS system in the place of the generator and the other on the machine.
They are also equipped with connections for direct connection to the OCTOPUS system, to the generator or to the alternative vacuum source and to the instruments for reading and control of the level of vacuum. The unused connections can be closed with the metal caps provided.
The flange supports are currently available in the versions shown on this page and are suitable for OCTOPUS systems that use the vacuum generators indicated to beside the item:

- Item SO 00 02 PVP 100 ÷ 200M
- Item SO 00 05 PVP 150 ÷ 300MD
- Item SO 00 06 PVP 450 MD

NOTE: The vacuum gauges and vacuum switches shown in the photo are not included with the supports.

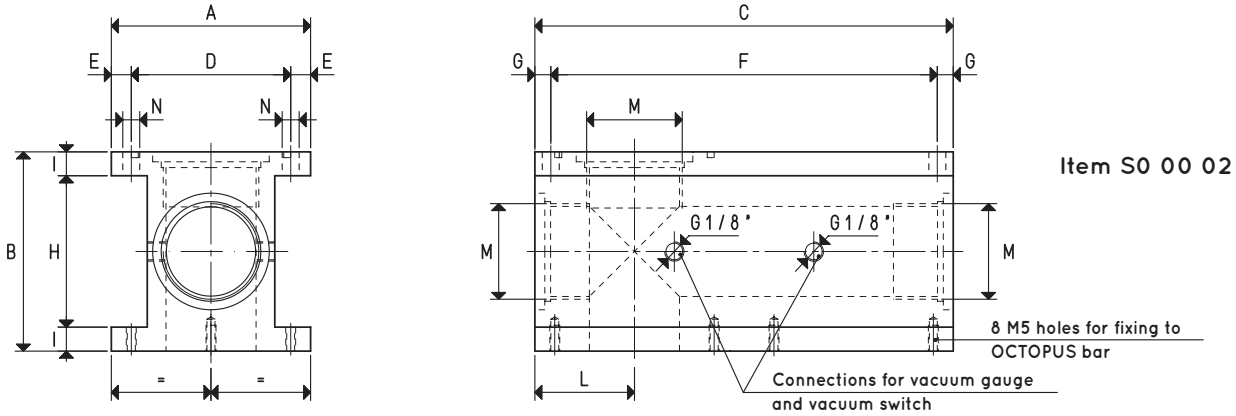

Item SO 00 02

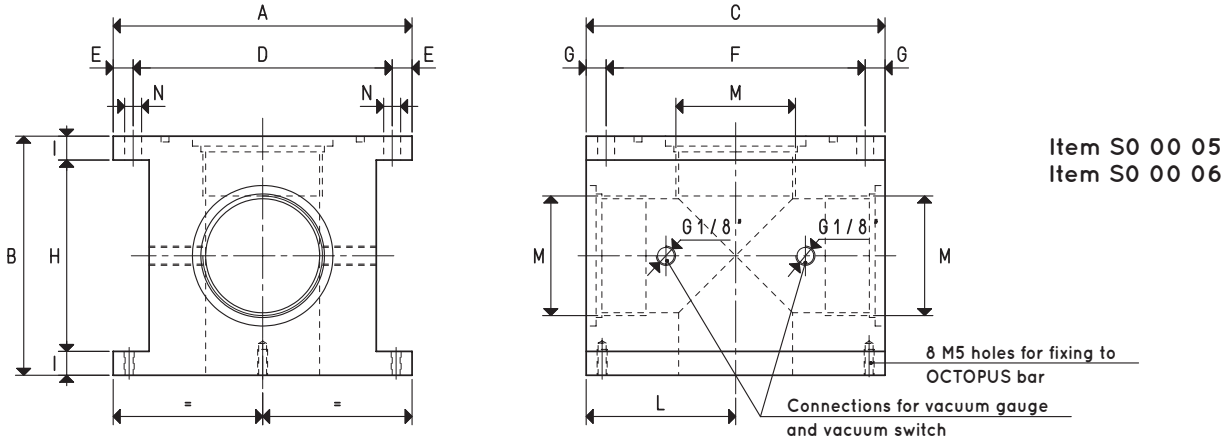

Item SO 00 05
Item SO 00 06

Item	A	B	C	D	E	F	G	H	I	L	M Ø	N Ø	Weight Kg
SO 00 02	100	100	210	80	10	194	8	76	12	50	G1" 1/2	8.5	2.8
SO 00 05	150	120	150	130	10	134	8	96	12	75	G2"	8.5	4.2
SO 00 06	150	145	150	130	10	134	8	121	12	75	G2" 1/2	8.5	4.3

Transformation ratio: N (newton) = Kg x 9.81 (force of gravity) inch = $\frac{mm}{25.4}$; pounds = $\frac{g}{453.6} = \frac{Kg}{0.4536}$