FLEXMOVE ALPINE CONVEYOR
Specification Sheet

975 Cottonwood Ave., PO Box 20, Hartland, Wisconsin 53029-0020, USA | www.dorner.com | info@dorner.com

INTRODUCTION TO ALPINE CONVEYORS

In most facilities, space is a premium, and conveyor location is often dependent on machinery and facility design. At Dorner, our goal is to simplify your processes rather than impede them. We have several solutions designed to give you more floor space and easy access to machinery and other areas of your facility.

The Alpine Conveyor is a compact spiral configuration commonly used as an accumulation or elevating buffer zone between machines or as a process step for cooling or drying. It can also be used for line balancing or product changeover purposes.

Alpines can be configured as an elevating/lowering system with a single or double serpentine configuration. Uses include an in-line accumulator with entry and exit at different levels, or an in-line or off-line accumulator with entry and exit at the same level.

Applications:

- Product buffering during machine maintenance
- Use of vertical space when there is not enough floor space to accumulate more product
- Product movement at different levels
- Downstream product flow avoiding a bottleneck in your process
- Drying, cooling & curing time
- Product being produced needs more time for process or testing
- Product cycling/batching or to store product while another is being dispatched
- Reduce the forces working on a product when accumulating
- Serves as a walk thru/line access for product to divert onto

Benefits:

- Keeps a constant sequence while buffering or accumulating products
- Uses a gentle slope while changing elevations and preventing product damage
- Maximizes vertical space, ensures the efficient utilization of machines with different speeds, and provides storage for pucks in FlexMove pallet system applications
- The accumulation zone is simple yet efficient and provides the possibility to continuously have bottleneck machines running
- Reduces the effects of machinery failures. It will accumulate the products from one machine while the nest machine in the line is being repaired or adjusted.
- Option of adding more levels when additional capacity is needed

© 2019 Dorner Mfg. Corp. | Part Number 851-905 0119 | D.O.

AVS Danmark ApS • Skelvej 18 • 2640 Hedehusene • +45 46 56 43 43 • www.avsdanmark.dk

TECHNICAL CONSIDERATIONS FOR ALPINE CONVEYOR DESIGN

Product Size

Products conveyed on Alpine Conveyors can be round, square, oval or even rectangular. If accumulation is required, attention does need to be paid to how the product accumulate in the corners. Round products obviously convey the best.

Due to general long length of Alpines, they typically require the use of wheel bend corners. This limits available conveyor widths to 65, 85, 105 and 150 mm.

Product width can be within the conveyor frame or slightly wider. Products wider than the conveyor should be limited to 40% of the conveyor width.

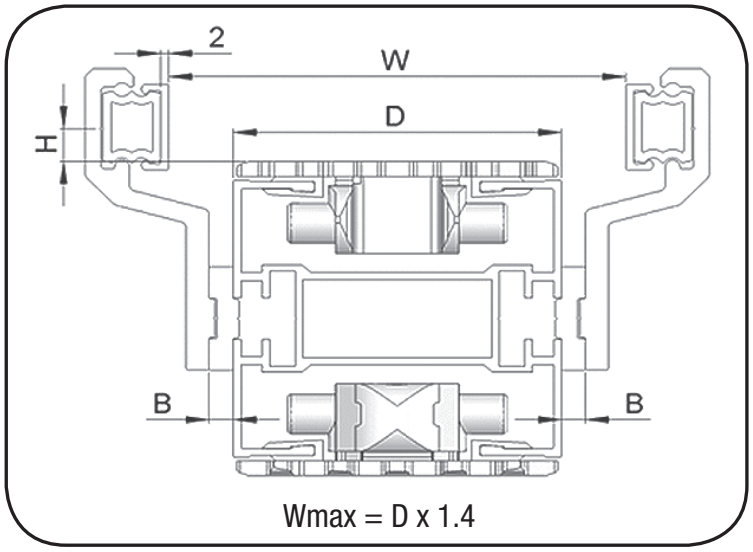

Wmax = D x 1.4

Chain Path

The direction of the chain, the length of the conveyor needed, and the elevation change will help determine the best choice for handling the chain. The two options are: to return the chain on the bottom of the conveyor, or use a top running chain that returns the chain to the infeed.

Return Chain

Return chain Alpines have the chain running on the top side and return side, similar to a typical conveyor. This style is normally used for smaller Alpine units up to 4 layers and less than 23 meters (75 ft) long.

Top Running Chain

Top running chain runs on the top side of the conveyor only, and can be returned down the end of the Alpine, and back to the drive tail. This feature is used for larger Alpine units and is generally limited to a total of 76 meters (250 ft) of chain.

In-Line VS. Off-Line

If an Alpine is to be used as a buffer, it needs to be determined if in-line or off-line is desired. If in-line is used, all normal production flow goes through the Alpine and would be accumulated upon a storage signal. Typically, a stop device is required. Off-line has traffic flow around the Alpine and diverts into accumulation as needed.

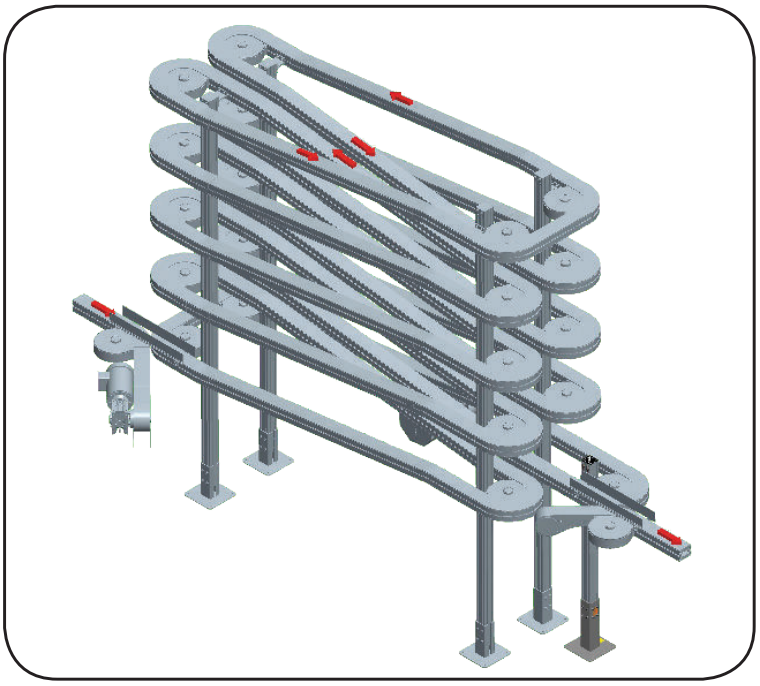

In-Line Alpine

In this configuration the Alpine Conveyor is directly in-line with production equipment and product is required to flow through the Alpine section, keeping the product in the same order it is produced.

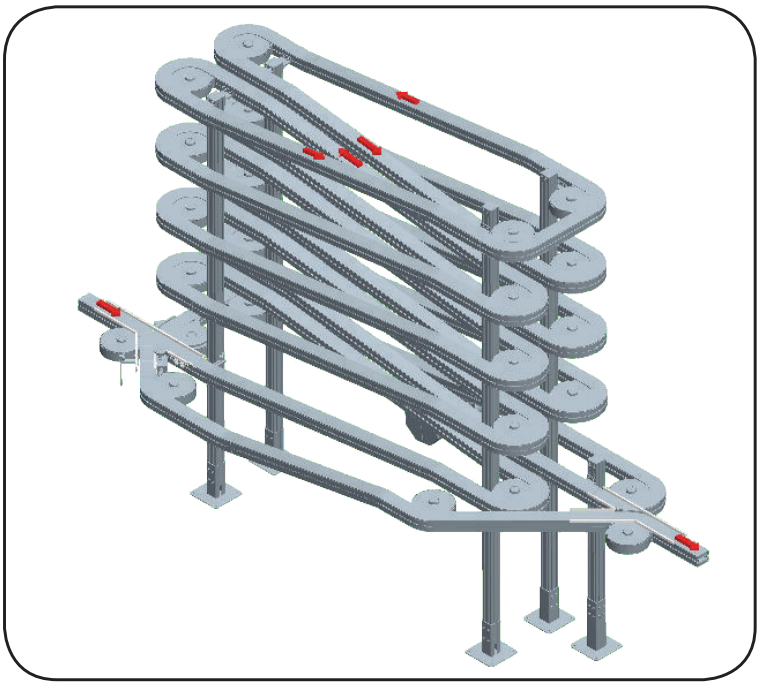

Off-Line Alpine

For off-line configurations, the Alpine Conveyor is brought into sequence using a merge or divert mechanism as needed.

Direction

Direction is determined by the product, belt selection, and product rate.

Incline

Product being produced starts at a lower elevation and is moved to a higher elevation.

Decline

Product being produced starts at a higher elevation and is moved to a lower elevation.

© 2019 Dorner Mfg. Corp. | Part Number 851-905 0119 | D.O.

Basic Alpine Configurations

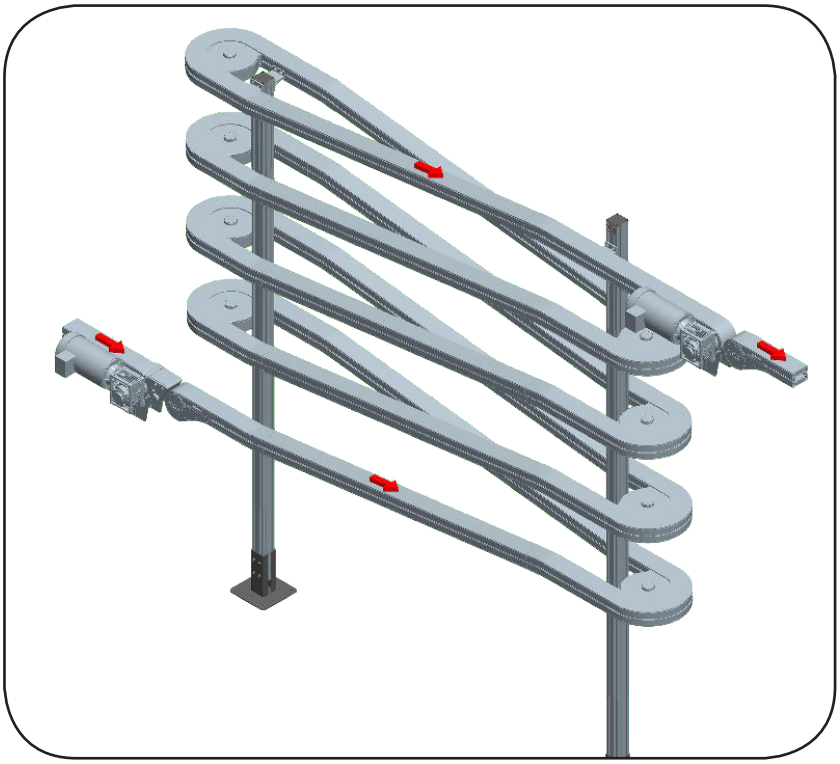

One Direction, Return Chain:

- Entry and exit at different levels
- Minimum floor space
- In-line accumulator
- Suitable for direct drive unit with return chain
- Up to 23 meters (75 ft) long total length
- Can incline or decline

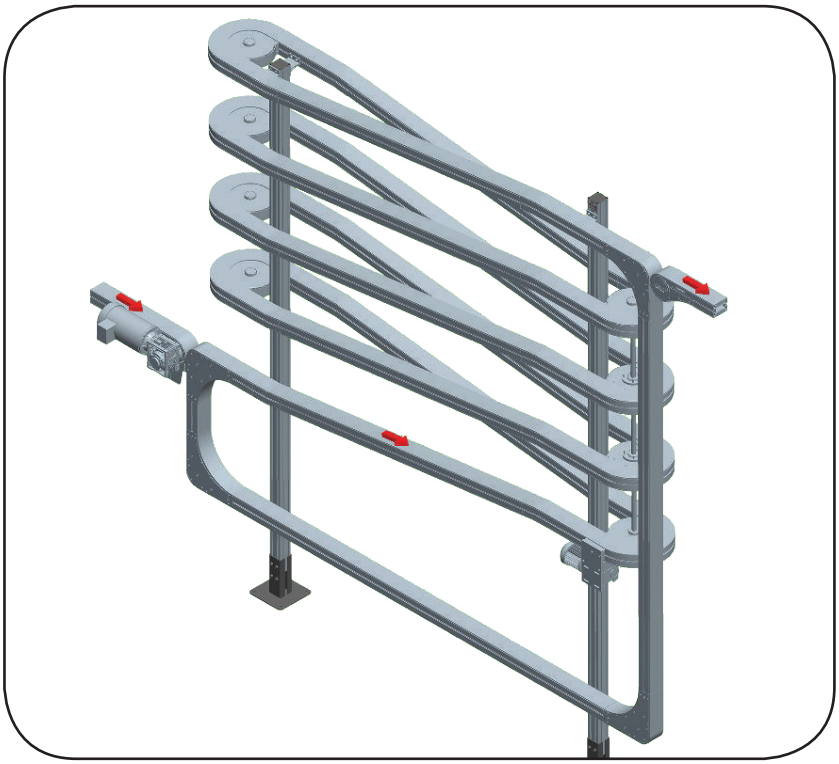

One Direction, Top Running Chain

- Entry and exit at different levels
- Minimum floor space
- In-line accumulator
- Suitable for wheel bend drive unit
- Top running chain
- Up to 30 meters (100 ft) long total conveyance length, 46 meters (150 ft) of total chain
- Can incline or decline

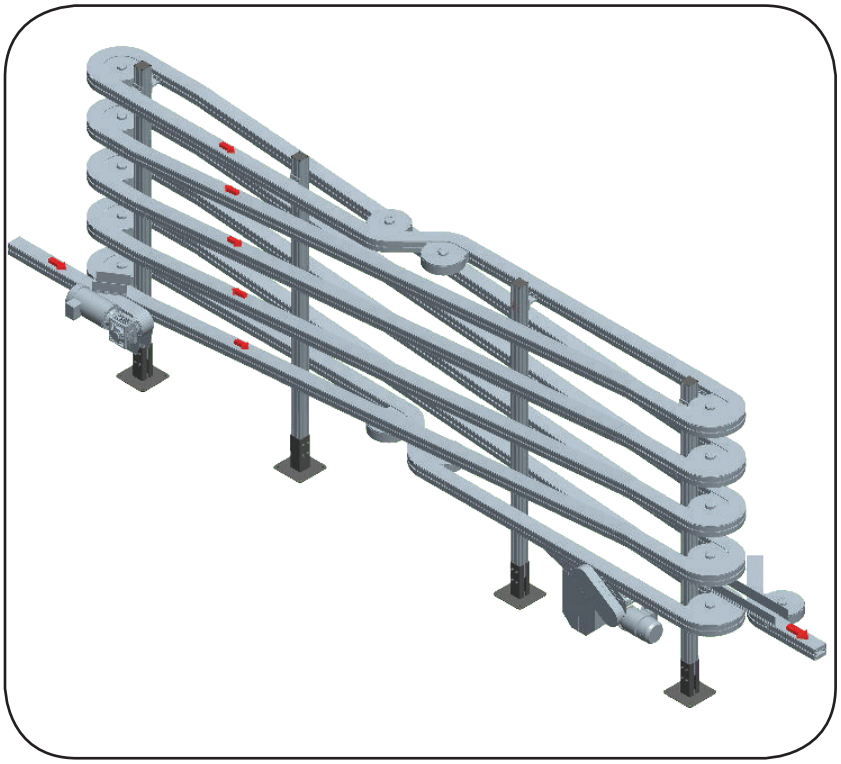

Dual Direction, Single Serpentine

- Entry and exit at same level
- In-line or off-line accumulator
- Suitable for catenary drive unit and/or horizontal wheel bend unit
- Chain on top side only
- Compact in height
- Up to 76 total meters (250 ft) of chain

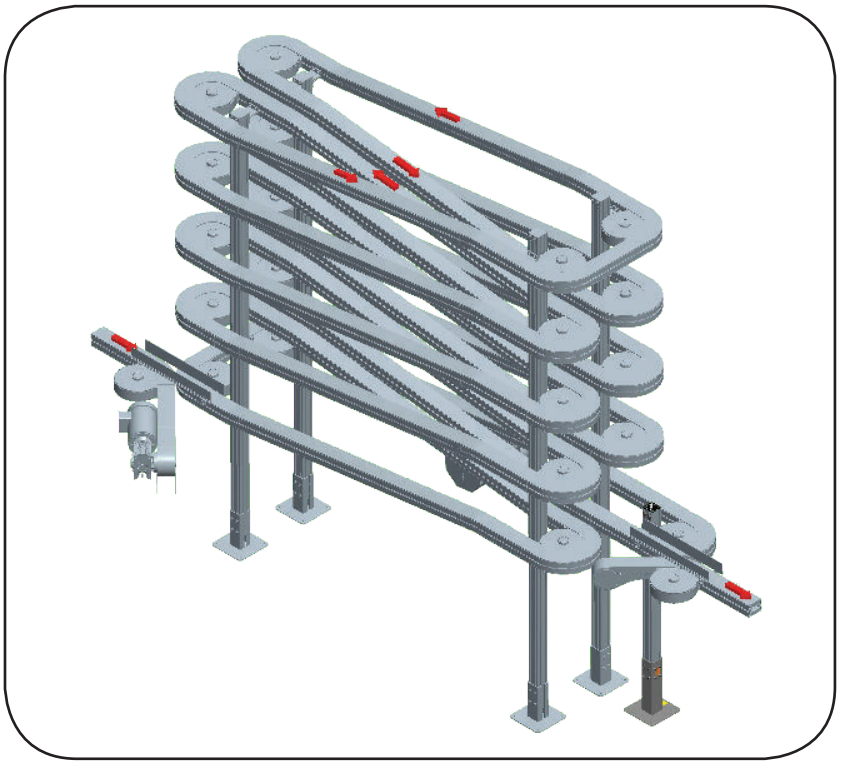

Dual Direction, Double Serpentine

- Entry and exit at same level
- In-line or off-line accumulator
- Suitable for catenary drive unit and/or horizontal wheel bend unit
- Chain on top side only
- Minimum floor space
- Extremely compact
- Up to 76 total meters (250 ft) of chain

© 2019 Dorner Mfg. Corp. | Part Number 851-905 0119 | D.O.

Product Transfers

Moving product from a machine or from an infeed section to the Alpine, or when transferring from the Alpine to a machine or discharge conveyors, requires investigation into the transfer and the product being transferred.

Things to consider when transferring product:

1. Can the product bridge the gap between the conveyor tails?
2. Will the product tip over when crossing gap?
3. Will the product change orientation and is that critical?
4. Will the product get bumped by other products?

In cases where there are concerns with products getting across the gap or any of the previously mentioned considerations, Dorner offers various transfers to move products.

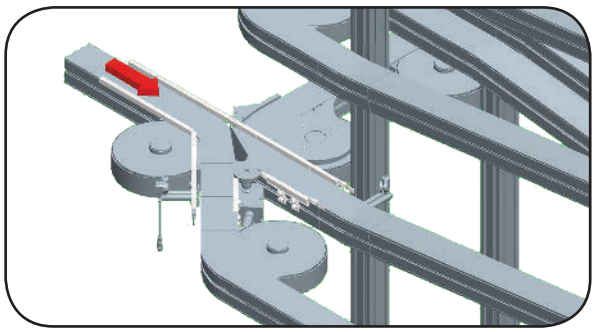

Side Plow

Generally used for small products, less than 75 mm (3 in) in diameter. It is also required for off-line Alpines. A fixed plow guide transfers parts from one conveyor onto or off of the Alpine.

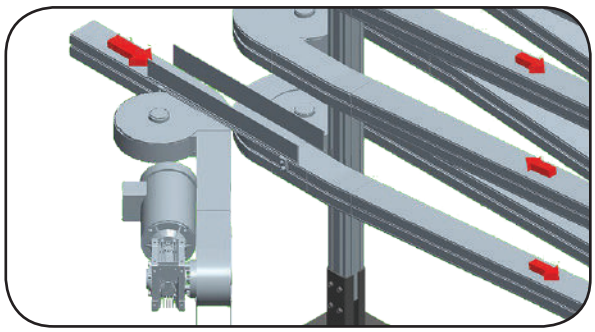

X-Transfer

Two tails coming together to form an X. A bend is installed so the two conveyors come closer together and the guiding transfers from one conveyor to the next in a straight line. Also used for parts smaller than 75 mm (3 in) in diameter and can only be used for in-line Alpine.

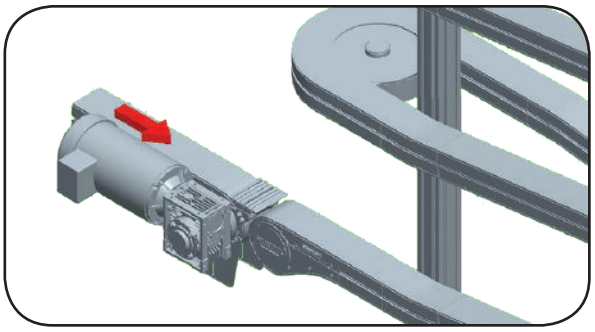

Roller Transfer

Allows for product greater than 75 mm (3 in) in diameter. A small plate with rollers is attached to the conveyors allowing the product to roll over the gap. Depending on product size and speed a product may sit on the transfer plate requiring the next product to push it along. Roller transfer is used for one direction Alpines.

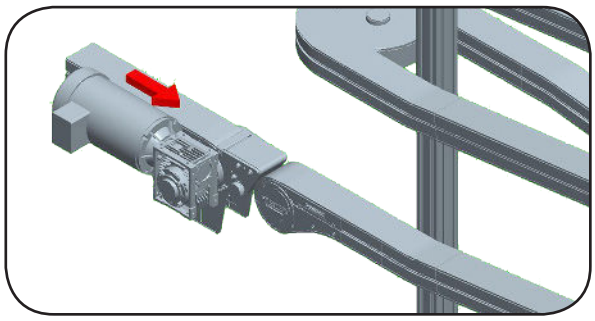

Powered Transfer

Contains a slave driven power conveyor between the two conveyor tails. This transfer ensures the product transfers smoothly. Powered transfers are used for one direction Alpines and for product 75 mm (3 in) and greater.

Alpine Constraints

Alpine conveyors have similar constraints that straight conveyors with bends and corners do, the only difference is the Alpine does it all in the same footprint. Here are some areas to consider when designing an Alpine for an application.

Weight

There a couple of areas that will need to be accounted for when adding up the total weight. The drive units motor, gearbox and control are designed to provide a certain amount of torque. The chain is designed to handle a certain amount of tension. The length of the conveyor will mean greater lengths of chain adding to the total weight. The product itself being conveyed and a pallet or puck if the product is being transported on one of these options. The weight of the product accumulated on the conveyor should not exceed 136 kgs (300lbs).

Total Conveyor Length and Levels

The maximum recommended length of the Alpine Conveyor with a single gearmotor is 30 meters (98 ft). This may require catenary drive module or weighted take up for the chain. Additional sections of Alpine can be added directly above, but will require an additional gearmotor. The overall length of the conveyor (footprint), the number of levels, the spacing between levels, and the chain path will determine the total length and the amount of levels that can be achieved.

Product Dimensions

The product dimensions and shape are critical for making its way through the Alpine without getting jammed up. While round products can easily make their way through the sections, square or rectangle products need to have the proper guiding to insure the product flows correctly.

Maximum Speed

Since the product is typically accumulating in an Alpine, the speed is reduced compared to straight running conveyors. The product can tip over in the incline sections or fall over in the decline sections. Going through the 180 degree wheel bends can also cause the product to fall of the conveyor if speed and proper guiding are not reviewed. The maximum speed should be kept less than 30 m/min (100 ft/min).

Angle of Incline or Decline

All Alpines have an incline or decline. The maximum angle depends on the product and configuration. If the Alpine is a buffer with products accumulating back-to-back, the incline angle should not exceed 5 degrees. If the Alpine is used as transport, angles greater than 5 degrees can be used along with the friction insert chain.

Environmental Conditions

The environment the conveyors are placed in can impact the performance and life of the conveyor. Ambient temperatures, product temperature (hot or cold coming from another piece of equipment), debris, chemicals, humidity, water spray, ultraviolet light, and electronic static discharge are all things to consider and understand when selecting the components and the expected life of the conveyor.

Dorner has over 50 years of experience designing conveyors for applications in a wide variety of environments using different loads and various speeds. While there are a number of areas to consider when designing an Alpine Conveyor, we are here to help with your application needs.

© 2019 Dorner Mfg. Corp. | Part Number 851-905 0119 | D.O.

Building Blocks of Alpine Conveyors

- The FlexMove Engineering Manual provides the necessary chain, conveyors parts, modules and hardware to engineer and design an Alpine solution
- Alpine Conveyors are available in conveyor widths of 65, 85, 105 and 150 mm (2.5, 3.3, 4 and 6 in)

Chain Examples

Standard Plain Chain **FMPC-5**

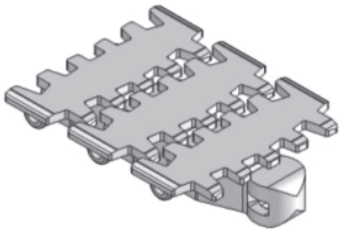

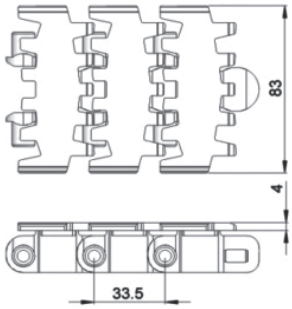

Used for accumulation Alpines, angles not to exceed 5 degrees.

Friction Top Chain **FMFT-5**

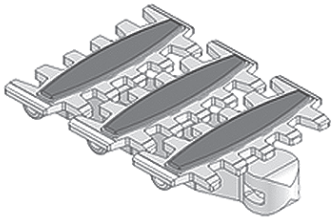

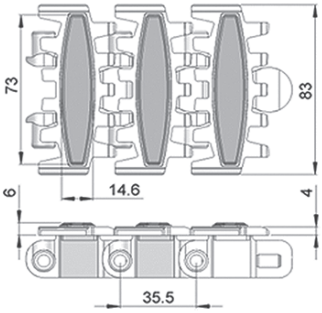

Used for transport Alpines, angles greater than 5 degrees.

Beam Examples

Conveyor Beam FMCB-3

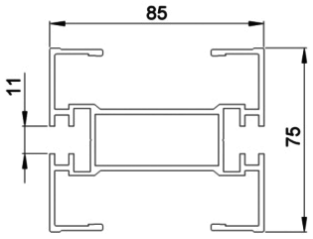

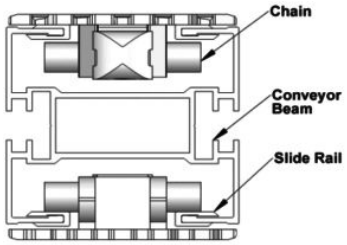

End Drive Examples

FM Direct End Drive without Motor **(LEFT)**
FMDD-A85

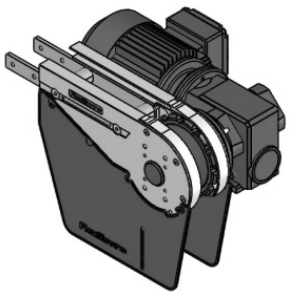

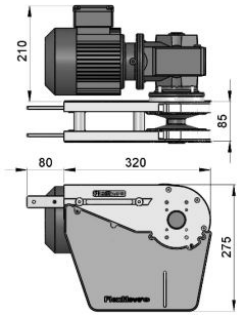

FM Direct End Drive without Motor **(RIGHT)**
FMDD-A85

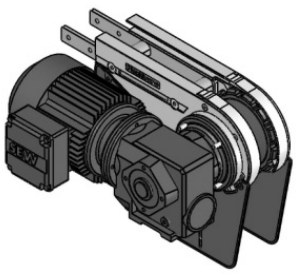

Used on One Direction, Return Chain Alpines.

FLEXMOVE ALPINE CONVEYOR Specification Sheet

Suspended Catenary Drive Example

FM Suspended Catenary Drive without Motor **(LEFT)**

FMCD-SD

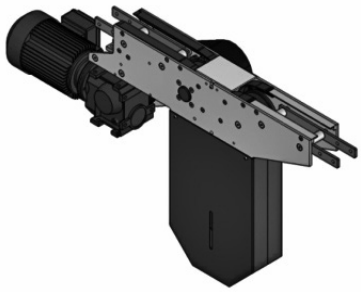

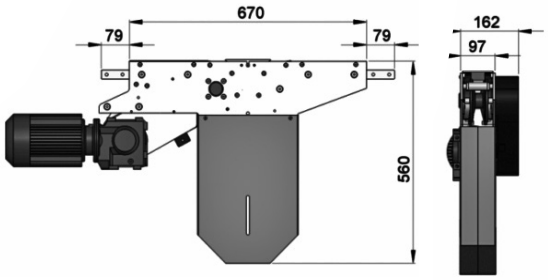

FM Suspended Catenary Drive without Motor **(RIGHT)**

FMCD-SD

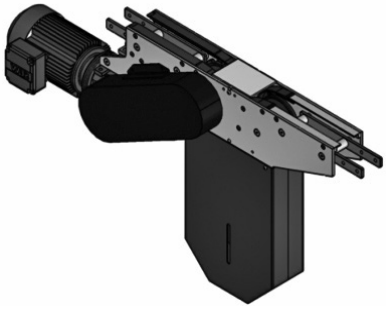

Dual Direction, Top Running Chain Alpines typically use Suspended Catenary Drives. They must be placed on a conveyor section that does not see product.

Wheel Drive Example

FM Direct Wheel Drive with Motor

FMWD-DD-0M

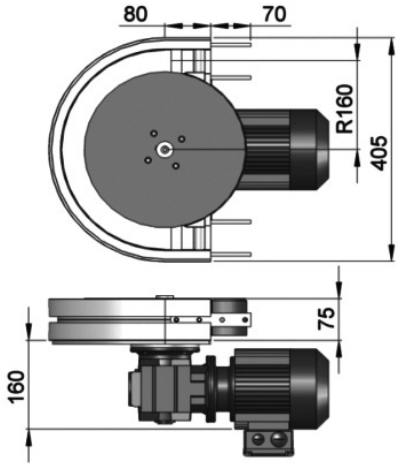

Multiple wheel drives are common driven together and used on One Direction, Top Running Chain Alpines.

Wheel Corner Example

FM Wheel Bend 180°

FMWB-180R160A

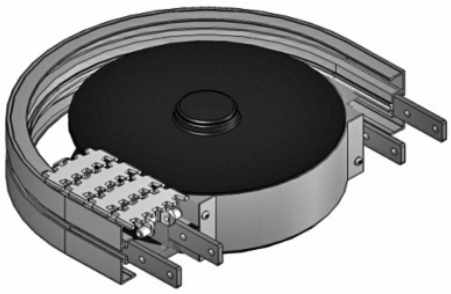

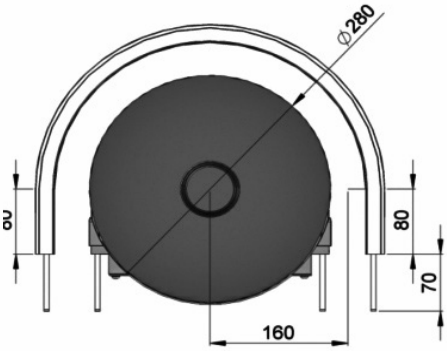

All Alpine require wheel corners to reduce chain friction.

© 2019 Dorner Mfg. Corp. | Part Number 85

Incline/Decline Section Example

FM Vertical Bend 5° — FMVB-10R400

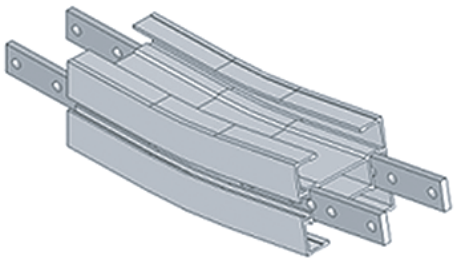

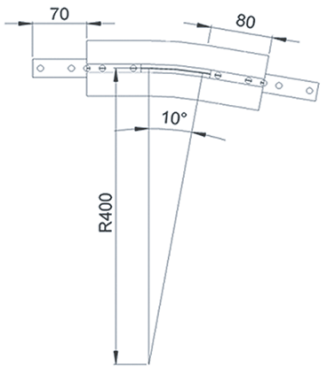

Vertical Bends provide the incline angle. They are connected directly to the wheel bend for compact construction.

Idler End Examples

FM Idler End 85 — FMIE-A85

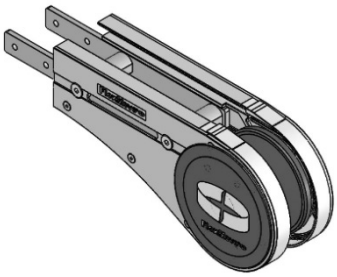

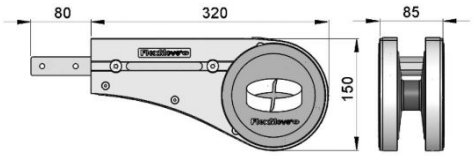

Standard Idler Ends are used on One Direction, Return Chain Alpines.

FM Idler Bend — FMIB-300

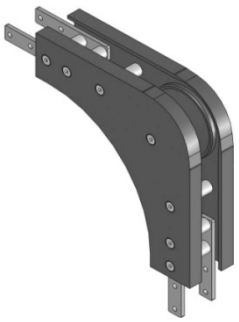

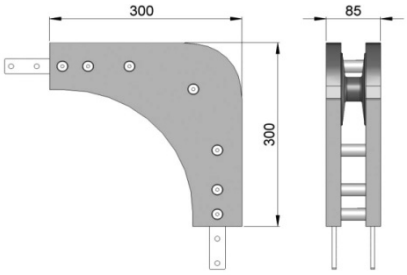

90 Degree Idler Ends are used on One Direction, Top Running Chain Alpines.

Guiding Examples

There are a variety of guiding options, brackets, connectors, and ends available for FlexMove Alpine Conveyors. Listed below is a sample of what is available in the FlexMove product line. Consult www.dornerconveyors.com and the FlexMove Engineering Manual for additional options.

FGRB-53x42 Assembly

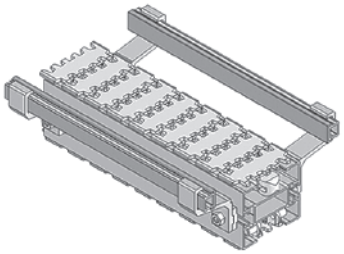

FGRA-6x9x45 Assembly

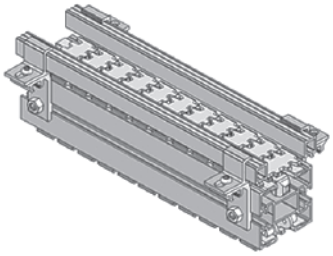

Width Adjustment Guide Rail Assembly

Container Handling

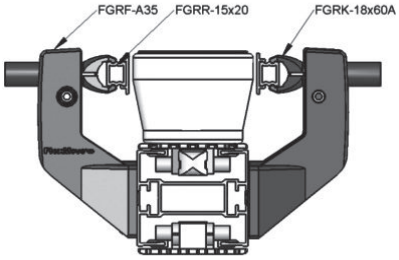

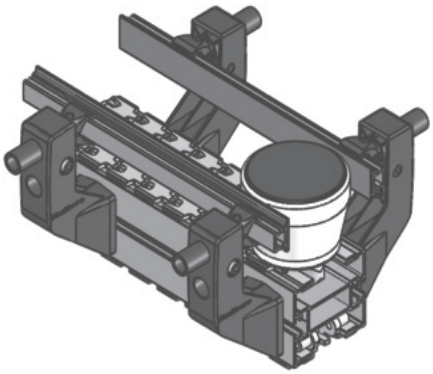

Stands & Support Examples

There are a number of support stand options, brackets, connectors, and feet. Listed below is a sample of what is available in the FlexMove product line. Consult our website and engineering manual for further options.

FAAL-80

Alpine beam support bracket - Aluminum

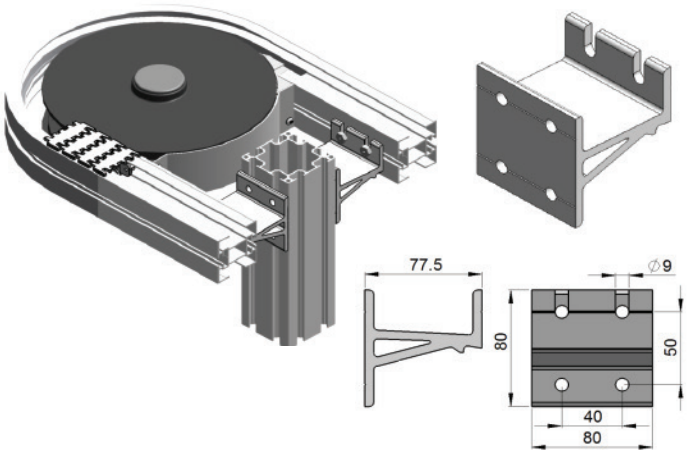

Alpine Support Structure
FK, FS, FM, FC, FL

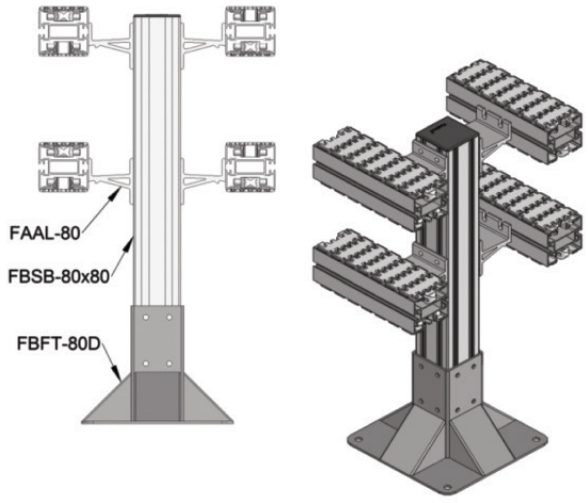

© 2019 Dorner Mfg. Corp. | Part Number 851-905 0119 | D.O.

Purchasing Alpine Conveyors

Dorner offers three solutions for purchasing an Alpine Conveyor.

- The first solution is to order all the necessary parts and components to build your FlexMove Conveyor on site. This will require the proper tools for cutting, bending and installing the conveyor. Consult our installation guide for FlexMove Conveyors for more details.

- The second solution is to have a complete conveyor provided through our FlexMove Solutions. With Flexmove Solutions you can have the conveyor built in our facility, tested, broken down into shippable sections and ship to the end site for installation.

- The third solution is to work with Dorner to have your FlexMove Conveyor assembled at the final site. The Conveyor will be purchased similar to option 1, but will be shipped as pre-cut and sized components. The Dorner installation team will then assemble and test the equipment at your location. Contact a Dorner representative for a quote on this service.

About Dorner:

With over 50 years of experience, Dorner is an Industry Leader in the design, applications, manufacturing, and integration of conveyor systems. Focusing on solving industrial, packaging, and sanitary conveyor automation needs, Dorner offers a wide range of conveyor solutions, which are flexible, easy to select, easy to integrate, and easy to acquire through a world class delivery & support network. From our sales and support team to our D-Tools on-line conveyor configurator, we are eager to help you find the right solution for your product handling needs!

www.dorner.com | info@dorner.com

DORNER®

TRANSFORMING CONVEYOR AUTOMATION

FLEXMOVE ALPINE CONVEYOR Specification Sheet

Contact Name:		Project Name:	
Company Name:		DTools Cong #:	
Email:		Phone:	
Address:			

© 2019 Dorner Mfg. Corp. | Part Number 851-905 0119 | D.O.